PRECISION TRUSS, INC.
EXCELLENCE IN COMPONENT DESIGN
PO BOX 1027 – ORANGEVALE, CA 95662
Phone (916) 879-2748 Fax (530) 435-5015

Truss Calculations

CUSTOMER	Espinoza	**TRACKING #**	J19-319
PROJECT	Lot 10 Fountain Grove	**ATTENTION**	
ADDRESS	6257 Himmel St. Paradise, CA	**DATE**	12-11-2019
PLAN	SFD	**SETS**	
DESIGNER	Bart Thompson	**MANUFACTURER**	STOCKTON TRUSS

BLDG DPT	ARCHITECT	PROJECT ENGINEER	CONTRACTOR

NOTES:

1) All lateral bracing specified is for bracing compression members and must be installed. Top chords are assumed to be laterally braced by roof sheeting or spaced sheeting. Bottom chords are to be laterally braced by 1x4 @10'-0" O.C. maximum or rigid ceiling.

2) Verification of design criteria, loading, deflection, framing methods, wind bracing and other lateral bracing that is always required is the responsibility of the Building Designer / Project Engineer. All truss designs must be reviewed and approved by Building Designer / Project Engineer prior to manufacturing.

3) Due to variations in weather, lumber dimensions and moisture content at the time of fabrication, the truss manufacturer will not be responsible for dimension variances of ¼" or less.

4) Do not cut or alter trusses.

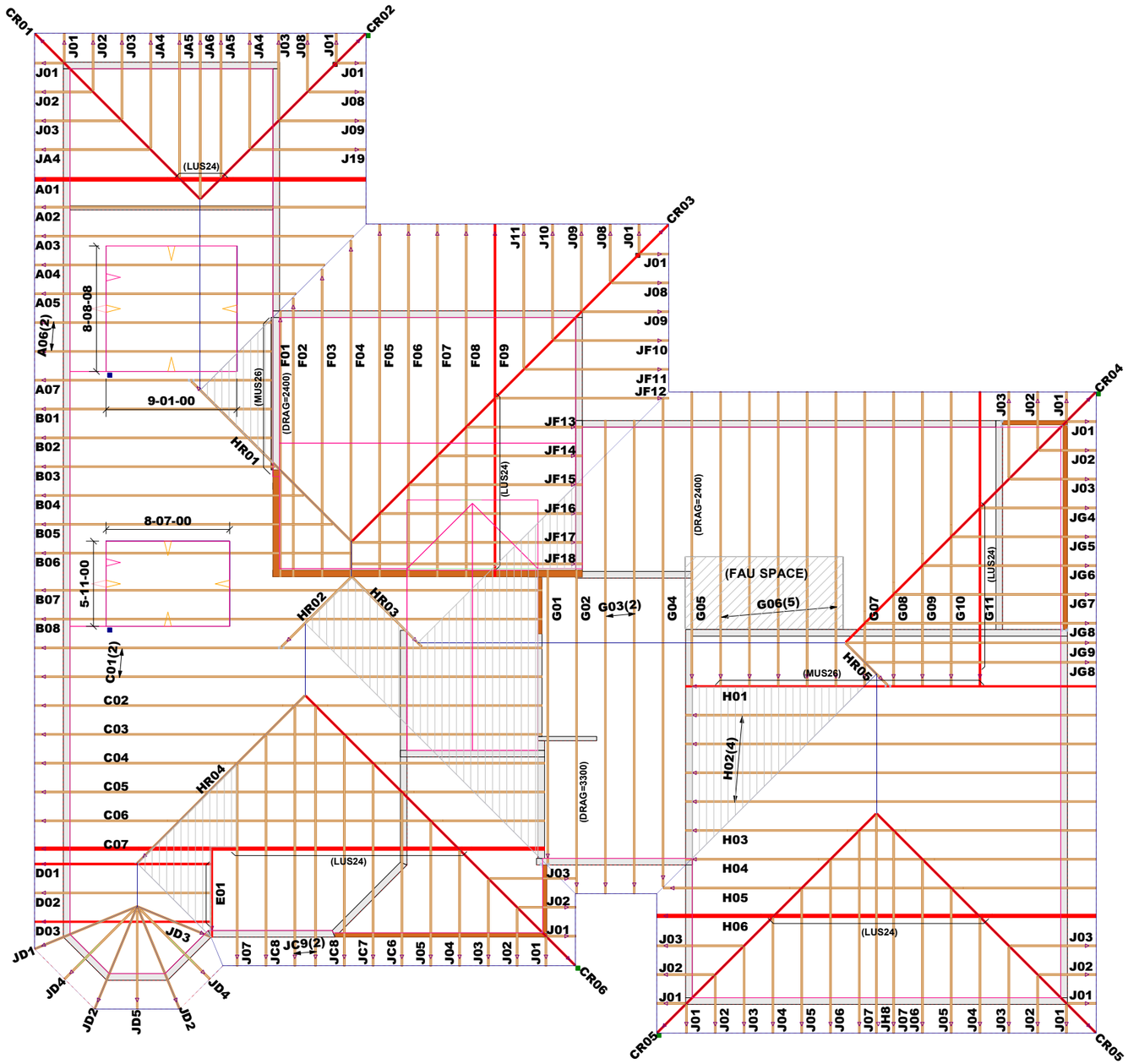

CUSTOMER:	ESPINOZA	DESIGNER: BT
PROJECT:	ESPINOZA RESIDENCE	SCALE: N.T.S.
PLAN:	SFD	
OPTION:	N/A	
JOB #:	J19-319	

PRECISION TRUSS, INC.
EXCELLENCE IN COMPONENT DESIGN

MiTek USA, Inc.
MiTek USA, Inc.
400 Sunrise Avenue, Suite 270
Roseville, CA 95661
Telephone 916-755-3571

Re: J19-319
ESPINOZA

The truss drawing(s) referenced below have been prepared by MiTek USA, Inc. under my direct supervision based on the parameters provided by Stockton Truss.

Pages or sheets covered by this seal: R60548609 thru R60548712

My license renewal date for the state of California is March 31, 2020.

December 11,2019

Teodosescu, Eduard

IMPORTANT NOTE: The seal on these truss component designs is a certification that the engineer named is licensed in the jurisdiction(s) identified and that the designs comply with ANSI/TPI 1. These designs are based upon parameters shown (e.g., loads, supports, dimensions, shapes and design codes), which were given to MiTek or TRENCO. Any project specific information included is for MiTek's or TRENCO's customers file reference purpose only, and was not taken into account in the preparation of these designs. MiTek or TRENCO has not independently verified the applicability of the design parameters or the designs for any particular building. Before use, the building designer should verify applicability of design parameters and properly incorporate these designs into the overall building design per ANSI/TPI 1, Chapter 2.

Job	Truss	Truss Type	Qty	Ply	ESPINOZA
J19-319	A01	California Girder	1	2	R60548609

Job Reference (optional)

Stockton Truss, STOCKTON, CA 95215 8.330 s Dec 5 2019 MiTek Industries, Inc. Tue Dec 10 11:42:45 2019 Page 1

ID:eURouH3h5RzkGDllLuCRE8yWpf_-Mfo6LMxNImYoyIOh6dXo9o25GU8ucBnglYMmBlyANbe

5-1-14	9-7-12	9-10-15	13-1-1	13-4-4	17-10-2	23-0-0
5-1-14	4-5-13	0-3-3	3-2-2	0-3-3	4-5-13	5-1-14

Scale = 1:38.6

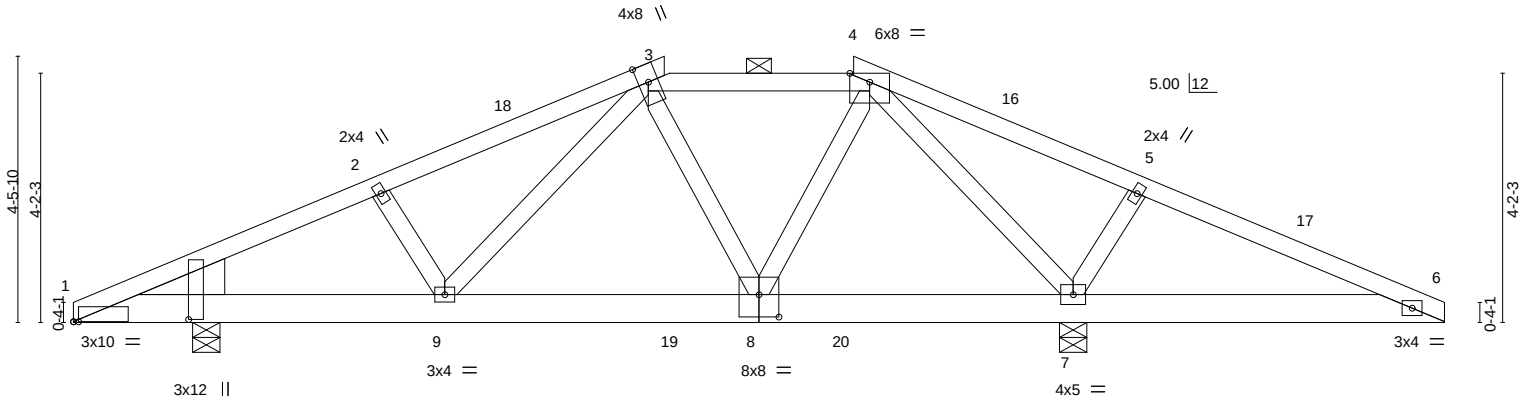

2-0-0	6-2-12	11-6-0	17-0-0	23-0-0
2-0-0	4-2-12	5-3-4	5-6-0	6-0-0

Plate Offsets (X,Y)-- [1:0-0-7,1-11-3], [1:0-1-1,0-0-0], [4:0-4-0,0-1-12], [8:0-4-0,0-4-8]

LOADING (psf)		SPACING-	2-0-0	CSI.		DEFL.	in	(loc)	l/defl	L/d	PLATES	GRIP
TCLL	30.0	Plate Grip DOL	1.15	TC	0.48	Vert(LL)	-0.06	8-9	>999	240	MT20	220/195
(Roof Snow=30.0)		Lumber DOL	1.15	BC	0.45	Vert(CT)	-0.11	8-9	>999	180		
TCDL	14.0	Rep Stress Incr	NO	WB	0.65	Horz(CT)	0.01	7	n/a	n/a		
BCLL	0.0 *	Code	IBC2015/TPI2014	Matrix-MSH		Wind(LL)	0.02	8-9	>999	360	Weight: 238 lb	FT = 20%
BCDL	10.0											

LUMBER-

TOP CHORD 2x4 DF No.1&Btr G
BOT CHORD 2x6 DF SS G
WEBS 2x4 DF Std G
WEDGE
Left: 2x8 DF SS

BRACING-

TOP CHORD Structural wood sheathing directly applied or 6-0-0 oc purlins, except 2-0-0 oc purlins (6-0-0 max.): 3-4.
BOT CHORD Rigid ceiling directly applied or 10-0-0 oc bracing, Except: 6-0-0 oc bracing: 6-7.

REACTIONS. (lb/size) 7=4944/0-5-8, 1=1817/0-5-8
Max Horz 1=-39(LC 11)
Max Uplift 7=-722(LC 7), 1=-236(LC 8)
Max Grav 7=5478(LC 28), 1=2121(LC 28)

FORCES. (lb) - Max. Comp./Max. Ten. - All forces 250 (lb) or less except when shown.
TOP CHORD 4-5=-466/3264, 5-6=-481/2936, 3-4=-2124/892, 1-2=-2291/504, 2-3=-2146/570
BOT CHORD 1-9=-416/1989, 8-9=-687/2275, 7-8=-1079/1114, 6-7=-2588/459
WEBS 5-7=-682/75, 4-7=-5695/786, 4-8=-300/2692, 3-8=-690/77, 3-9=-654/506, 2-9=-412/78

NOTES-

1) 2-ply truss to be connected together with 10d (0.131"x3") nails as follows:
Top chords connected as follows: 2x4 - 1 row at 0-5-0 oc.
Bottom chords connected as follows: 2x6 - 2 rows staggered at 0-7-0 oc.
Webs connected as follows: 2x4 - 1 row at 0-9-0 oc.
2) All loads are considered equally applied to all plies, except if noted as front (F) or back (B) face in the LOAD CASE(S) section. Ply to ply connections have been provided to distribute only loads noted as (F) or (B), unless otherwise indicated.
3) Wind: ASCE 7-10; Vult=110mph (3-second gust) Vasd=87mph; TCDL=7.2psf; BCDL=4.2psf; h=25ft; Cat. II; Exp C; Enclosed; MWFRS (envelope); cantilever left and right exposed ; porch left and right exposed; Lumber DOL=1.33 plate grip DOL=1.33
4) TCLL: ASCE 7-10; Pf=30.0 psf (flat roof snow); Category II; Exp C; Partially Exp.; Ct=1.00
5) Unbalanced snow loads have been considered for this design.
6) Provide adequate drainage to prevent water ponding.
7) This truss has been designed for a 10.0 psf bottom chord live load nonconcurrent with any other live loads.
8) * This truss has been designed for a live load of 20.0psf on the bottom chord in all areas where a rectangle 3-6-0 tall by 2-0-0 wide will fit between the bottom chord and any other members.
9) A plate rating reduction of 20% has been applied for the green lumber members.
10) Provide mechanical connection (by others) of truss to bearing plate capable of withstanding 100 lb uplift at joint(s) except (jt=lb) 7=722, 1=236.
11) Graphical purlin representation does not depict the size or the orientation of the purlin along the top and/or bottom chord.
12) Hanger(s) or other connection device(s) shall be provided sufficient to support concentrated load(s) 1251 lb down and 230 lb up at 9-9-7, and 361 lb down and 161 lb up at 13-2-9, and 810 lb down and 157 lb up at 23-0-0 on top chord, and 255 lb down and 35 lb up at 10-0-12, 594 lb down and 84 lb up at 11-6-0, and 255 lb down and 35 lb up at 12-11-4, and 988 lb down and 89 lb up at 13-1-1 on bottom chord. The design/selection of such connection device(s) is the responsibility of others.
13) This truss is designed for a creep factor of 3.01, which is used to calculate the Vert(CT) deflection per ANSI/TPI 1.

Continued on page 2

REGISTERED PROFESSIONAL ENGINEER EDUARD TEODOSESCU C 75435 EXP. 03/31/2020 STATE OF CALIFORNIA

December 11,2019

LOAD CASE(S) Standard

WARNING - Verify design parameters and READ NOTES ON THIS AND INCLUDED MITEK REFERENCE PAGE MII-7473 rev. 10/03/2015 BEFORE USE.

Design valid for use only with MiTek® connectors. This design is based only upon parameters shown, and is for an individual building component, not a truss system. Before use, the building designer must verify the applicability of design parameters and properly incorporate this design into the overall building design. Bracing indicated is to prevent buckling of individual truss web and/or chord members only. Additional temporary and permanent bracing is always required for stability and to prevent collapse with possible personal injury and property damage. For general guidance regarding the fabrication, storage, delivery, erection and bracing of trusses and truss systems, see ***ANSI/TPI1 Quality Criteria, DSB-89 and BCSI Building Component Safety Information*** available from Truss Plate Institute, 218 N. Lee Street, Suite 312, Alexandria, VA 22314.

MiTek USA, Inc.
400 Sunrise Avenue, Suite 270
Roseville, CA 95661

LOAD CASE(S) Standard

1) Dead + Snow (balanced): Lumber Increase=1.15, Plate Increase=1.15
   Uniform Loads (plf)
   Vert: 4-6=-88, 3-4=-88, 1-3=-88, 1-6=-20
   Concentrated Loads (lb)
   Vert: 6=-810(F) 4=-242 3=-1132 8=-594(B) 19=-255(B) 20=-1243(B=-255)

WARNING - Verify design parameters and READ NOTES ON THIS AND INCLUDED MITEK REFERENCE PAGE MII-7473 rev. 10/03/2015 BEFORE USE.
Design valid for use only with MiTek® connectors. This design is based only upon parameters shown, and is for an individual building component, not a truss system. Before use, the building designer must verify the applicability of design parameters and properly incorporate this design into the overall building design. Bracing indicated is to prevent buckling of individual truss web and/or chord members only. Additional temporary and permanent bracing is always required for stability and to prevent collapse with possible personal injury and property damage. For general guidance regarding the fabrication, storage, delivery, erection and bracing of trusses and truss systems, see ***ANSI/TPI1 Quality Criteria, DSB-89 and BCSI Building Component Safety Information*** available from Truss Plate Institute, 218 N. Lee Street, Suite 312, Alexandria, VA 22314.

MiTek USA, Inc.
400 Sunrise Avenue, Suite 270
Roseville, CA 95661

Job	Truss	Truss Type	Qty	Ply	ESPINOZA R60548610
J19-319	A02	Common	1	1	Job Reference (optional)

Stockton Truss, STOCKTON, CA 95215 8.330 s Dec 5 2019 MiTek Industries, Inc. Tue Dec 10 11:42:46 2019 Page 1
ID:eURouH3h5RzkGDllLuCRE8yWpf_-qrMUZiy?34gfZRztgL21i?aGMtaDLk9p_C5JjByANbd

2-2-12	6-1-12	11-6-0	16-10-4	20-9-4	23-0-0
2-2-12	3-11-0	5-4-4	5-4-4	3-11-0	2-2-12

Scale = 1:37.7

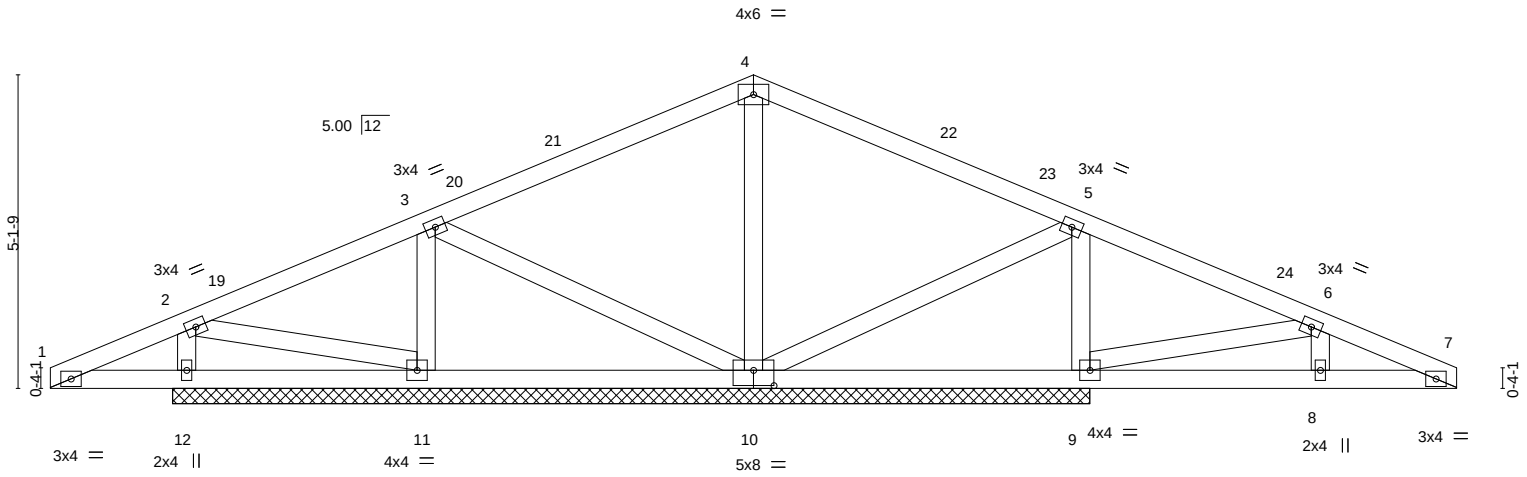

2-0-0	2-2-12	6-1-12	11-6-0	16-10-4	20-9-4	23-0-0
2-0-0	0-2-12	3-11-0	5-4-4	5-4-4	3-11-0	2-2-12

Plate Offsets (X,Y)-- [10:0-4-0,0-3-0]

LOADING (psf)		SPACING-	2-0-0	CSI.		DEFL.	in	(loc)	l/defl	L/d	PLATES	GRIP
TCLL	30.0	Plate Grip DOL	1.15	TC	0.46	Vert(LL)	n/a	-	n/a	999	MT20	220/195
(Roof Snow=30.0)		Lumber DOL	1.15	BC	0.12	Vert(CT)	n/a	-	n/a	999		
TCDL	14.0	Rep Stress Incr	YES	WB	0.26	Horz(CT)	-0.01	9	n/a	n/a		
BCLL	0.0 *	Code	IBC2015/TPI2014	Matrix-MSH								
BCDL	10.0										Weight: 107 lb	FT = 20%

LUMBER-
TOP CHORD 2x4 DF No.1&Btr G
BOT CHORD 2x4 DF No.1&Btr G
WEBS 2x4 DF Std G

BRACING-
TOP CHORD Structural wood sheathing directly applied or 10-0-0 oc purlins.
BOT CHORD Rigid ceiling directly applied or 6-0-0 oc bracing.

REACTIONS. All bearings 15-0-0.
(lb) - Max Horz 12=46(LC 18)
Max Uplift All uplift 100 lb or less at joint(s) 9, 11, 12
Max Grav All reactions 250 lb or less at joint(s) except 10=596(LC 1), 9=1157(LC 21), 11=518(LC 20), 12=412(LC 20)

FORCES. (lb) - Max. Comp./Max. Ten. - All forces 250 (lb) or less except when shown.
TOP CHORD 1-2=-144/255, 3-4=-125/343, 4-5=-113/351, 5-6=-423/821, 6-7=-110/288
BOT CHORD 9-10=-681/443
WEBS 4-10=-635/178, 5-10=-253/492, 5-9=-948/312, 6-9=-482/333, 3-11=-464/64, 2-12=-320/117

NOTES-
1) Wind: ASCE 7-10; Vult=110mph (3-second gust) Vasd=87mph; TCDL=7.2psf; BCDL=4.2psf; h=25ft; Cat. II; Exp C; Enclosed; MWFRS (envelope) and C-C Exterior(2) 0-0-0 to 3-0-0, Interior(1) 3-0-0 to 11-6-0, Exterior(2) 11-6-0 to 14-6-0, Interior(1) 14-6-0 to 23-0-0 zone; cantilever left and right exposed ; porch left and right exposed;C-C for members and forces & MWFRS for reactions shown; Lumber DOL=1.33 plate grip DOL=1.33
2) TCLL: ASCE 7-10; Pf=30.0 psf (flat roof snow); Category II; Exp C; Partially Exp.; Ct=1.00
3) Unbalanced snow loads have been considered for this design.
4) This truss has been designed for a 10.0 psf bottom chord live load nonconcurrent with any other live loads.
5) * This truss has been designed for a live load of 20.0psf on the bottom chord in all areas where a rectangle 3-6-0 tall by 2-0-0 wide will fit between the bottom chord and any other members.
6) A plate rating reduction of 20% has been applied for the green lumber members.
7) Provide mechanical connection (by others) of truss to bearing plate capable of withstanding 100 lb uplift at joint(s) 9, 11, 12.
8) Non Standard bearing condition. Review required.
9) This truss is designed for a creep factor of 3.01, which is used to calculate the Vert(CT) deflection per ANSI/TPI 1.

December 11,2019

WARNING - Verify design parameters and READ NOTES ON THIS AND INCLUDED MITEK REFERENCE PAGE MII-7473 rev. 10/03/2015 BEFORE USE.
Design valid for use only with MiTek® connectors. This design is based only upon parameters shown, and is for an individual building component, not a truss system. Before use, the building designer must verify the applicability of design parameters and properly incorporate this design into the overall building design. Bracing indicated is to prevent buckling of individual truss web and/or chord members only. Additional temporary and permanent bracing is always required for stability and to prevent collapse with possible personal injury and property damage. For general guidance regarding the fabrication, storage, delivery, erection and bracing of trusses and truss systems, see ***ANSI/TPI1 Quality Criteria, DSB-89 and BCSI Building Component Safety Information*** available from Truss Plate Institute, 218 N. Lee Street, Suite 312, Alexandria, VA 22314.

MiTek USA, Inc.
400 Sunrise Avenue, Suite 270
Roseville, CA 95661

Job	Truss	Truss Type	Qty	Ply	ESPINOZA R60548611
J19-319	A03	Common	1	1	Job Reference (optional)

Stockton Truss, STOCKTON, CA 95215 8.330 s Dec 5 2019 MiTek Industries, Inc. Tue Dec 10 11:42:47 2019 Page 1
ID:eURouH3h5RzkGDllLuCRE8yWpf_-l1wsm2zdqOoWBbY3E2ZGED7Q6HuP41LzDsrsGdyANbc

6-1-1	11-6-0	16-7-15	22-1-8
6-1-1	5-4-15	5-2-0	5-5-9

Scale = 1:36.5

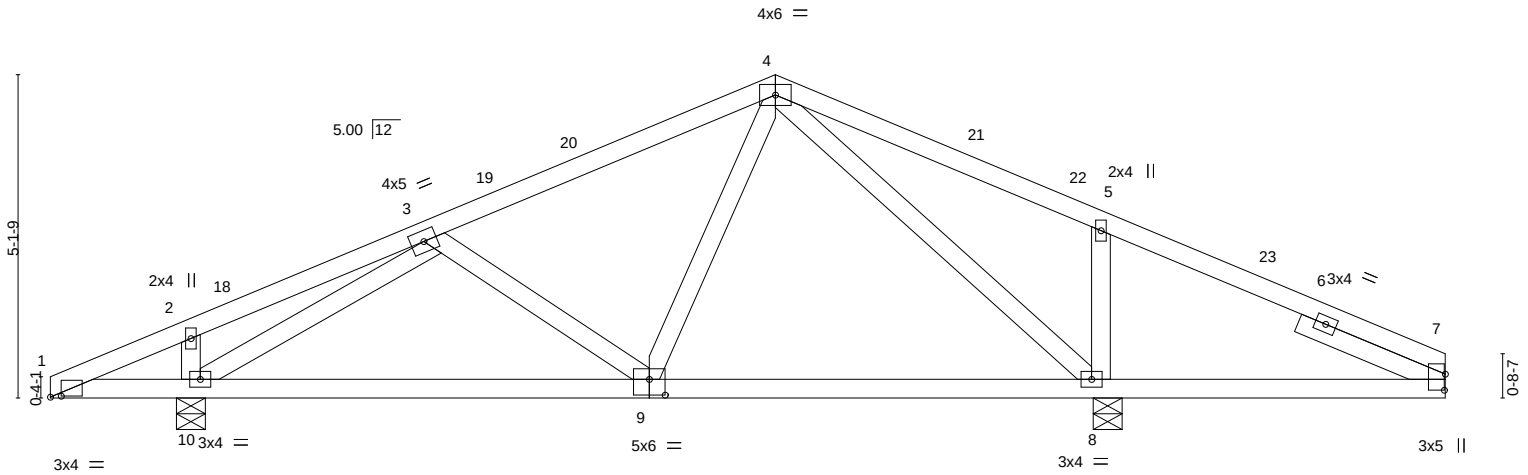

2-0-0	2-2-12	9-6-0	16-9-4	17-0-0	22-1-8
2-0-0	0-2-12	7-3-4	7-3-4	0-2-12	5-1-8

Plate Offsets (X,Y)-- [1:0-2-1,0-0-3], [7:0-3-1,0-0-3], [9:0-3-0,0-3-0]

LOADING (psf)		SPACING-	2-0-0	CSI.		DEFL.	in	(loc)	l/defl	L/d	PLATES	GRIP
TCLL	30.0	Plate Grip DOL	1.15	TC	0.52	Vert(LL)	-0.04	9-10	>999	240	MT20	220/195
(Roof Snow=30.0)		Lumber DOL	1.15	BC	0.26	Vert(CT)	-0.12	9-10	>999	180		
TCDL	14.0	Rep Stress Incr	YES	WB	0.90	Horz(CT)	0.01	8	n/a	n/a		
BCLL	0.0 *	Code	IBC2015/TPI2014	Matrix-MSH		Wind(LL)	0.06	9-10	>999	360	Weight: 99 lb	FT = 20%
BCDL	10.0											

LUMBER-
TOP CHORD 2x4 DF No.1&Btr G
BOT CHORD 2x4 DF No.1&Btr G
WEBS 2x4 DF Std G
SLIDER Right 2x4 DF Std -G-H 2-6-0

BRACING-
TOP CHORD Structural wood sheathing directly applied or 6-0-0 oc purlins.
BOT CHORD Rigid ceiling directly applied or 6-0-0 oc bracing.

REACTIONS. (lb/size) 8=1462/0-5-8, 10=927/0-5-8
Max Horz 10=52(LC 14)
Max Uplift 8=-193(LC 11), 10=-138(LC 10)
Max Grav 8=1462(LC 1), 10=990(LC 20)

FORCES. (lb) - Max. Comp./Max. Ten. - All forces 250 (lb) or less except when shown.
TOP CHORD 3-4=-688/359, 4-5=-180/553, 5-7=-262/588
BOT CHORD 9-10=-251/789, 8-9=-89/389, 7-8=-437/271
WEBS 3-9=-327/83, 4-9=-318/352, 4-8=-1034/470, 5-8=-646/166, 3-10=-1090/306

NOTES-
1) Wind: ASCE 7-10; Vult=110mph (3-second gust) Vasd=87mph; TCDL=7.2psf; BCDL=4.2psf; h=25ft; Cat. II; Exp C; Enclosed; MWFRS (envelope) and C-C Exterior(2) 0-0-0 to 3-0-0, Interior(1) 3-0-0 to 11-6-0, Exterior(2) 11-6-0 to 14-6-0, Interior(1) 14-6-0 to 22-1-8 zone; cantilever left and right exposed ; porch left and right exposed;C-C for members and forces & MWFRS for reactions shown; Lumber DOL=1.33 plate grip DOL=1.33
2) TCLL: ASCE 7-10; Pf=30.0 psf (flat roof snow); Category II; Exp C; Partially Exp.; Ct=1.00
3) Unbalanced snow loads have been considered for this design.
4) This truss has been designed for a 10.0 psf bottom chord live load nonconcurrent with any other live loads.
5) * This truss has been designed for a live load of 20.0psf on the bottom chord in all areas where a rectangle 3-6-0 tall by 2-0-0 wide will fit between the bottom chord and any other members.
6) A plate rating reduction of 20% has been applied for the green lumber members.
7) Provide mechanical connection (by others) of truss to bearing plate capable of withstanding 100 lb uplift at joint(s) except (jt=lb) 8=193, 10=138.
8) This truss is designed for a creep factor of 3.01, which is used to calculate the Vert(CT) deflection per ANSI/TPI 1.

REGISTERED PROFESSIONAL ENGINEER
EDUARD TEODOSESCU
C 75435
EXP. 03/31/2020
STATE OF CALIFORNIA

December 11,2019

WARNING - Verify design parameters and READ NOTES ON THIS AND INCLUDED MITEK REFERENCE PAGE MII-7473 rev. 10/03/2015 BEFORE USE.
Design valid for use only with MiTek® connectors. This design is based only upon parameters shown, and is for an individual building component, not a truss system. Before use, the building designer must verify the applicability of design parameters and properly incorporate this design into the overall building design. Bracing indicated is to prevent buckling of individual truss web and/or chord members only. Additional temporary and permanent bracing is always required for stability and to prevent collapse with possible personal injury and property damage. For general guidance regarding the fabrication, storage, delivery, erection and bracing of trusses and truss systems, see ***ANSI/TPI1 Quality Criteria, DSB-89 and BCSI Building Component Safety Information*** available from Truss Plate Institute, 218 N. Lee Street, Suite 312, Alexandria, VA 22314.

MiTek USA, Inc.
400 Sunrise Avenue, Suite 270
Roseville, CA 95661

Job	Truss	Truss Type	Qty	Ply	ESPINOZA R60548612
J19-319	A04	Roof Special	1	1	Job Reference (optional)

Stockton Truss, STOCKTON, CA 95215 8.330 s Dec 5 2019 MiTek Industries, Inc. Tue Dec 10 11:42:48 2019 Page 1
ID:eURouH3h5RzkGDllLuCRE8yWpf_-nDUE_OzGbhwNpl7Gnl4VnQgbghB8pXP6SWaQo4yANbb

2-2-12	4-11-8	11-6-0	14-0-8	16-9-4	20-1-8
2-2-12	2-8-12	6-6-8	2-6-8	2-8-12	3-4-4

Scale = 1:35.0

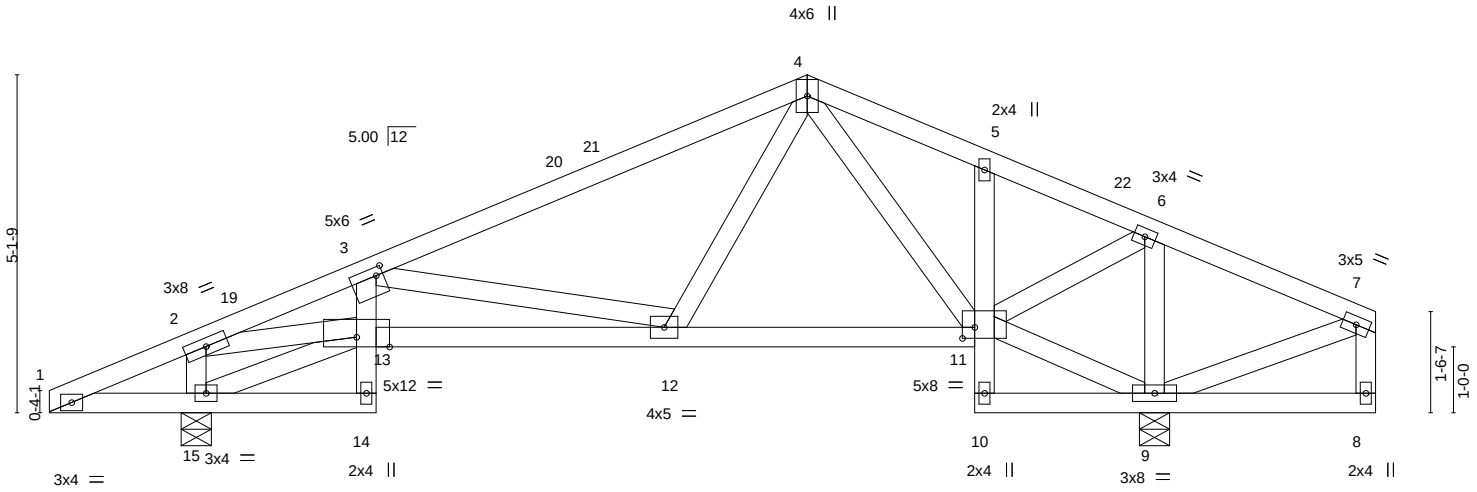

2-0-0	2-2-12	4-11-8	9-6-0	14-0-8	16-9-4	17-0-0	20-1-8
2-0-0	0-2-12	2-8-12	4-6-8	4-6-8	2-8-12	0-2-12	3-1-8

Plate Offsets (X,Y)-- [3:0-1-4,0-1-8], [11:0-2-4,0-2-0]

LOADING (psf)		SPACING-	2-0-0	CSI.		DEFL.	in	(loc)	l/defl	L/d	PLATES	GRIP
TCLL	30.0	Plate Grip DOL	1.15	TC	0.53	Vert(LL)	-0.05	12-13	>999	240	MT20	220/195
(Roof Snow=30.0)		Lumber DOL	1.15	BC	0.42	Vert(CT)	-0.14	12-13	>999	180		
TCDL	14.0	Rep Stress Incr	YES	WB	0.72	Horz(CT)	0.09	9	n/a	n/a		
BCLL	0.0 *	Code	IBC2015/TPI2014	Matrix-MSH		Wind(LL)	0.06	12-13	>999	360	Weight: 107 lb	FT = 20%
BCDL	10.0											

LUMBER-
TOP CHORD 2x4 DF No.1&Btr G
BOT CHORD 2x4 DF No.1&Btr G *Except*
5-10: 2x4 DF Std G
WEBS 2x4 DF Std G

BRACING-
TOP CHORD Structural wood sheathing directly applied or 5-2-9 oc purlins, except end verticals.
BOT CHORD Rigid ceiling directly applied or 6-0-0 oc bracing.

REACTIONS. (lb/size) 15=1006/0-5-8, 9=1151/0-5-8
Max Horz 15=100(LC 11)
Max Uplift 15=-133(LC 10), 9=-157(LC 11)
Max Grav 15=1019(LC 20), 9=1151(LC 1)

FORCES. (lb) - Max. Comp./Max. Ten. - All forces 250 (lb) or less except when shown.
TOP CHORD 2-3=-1638/942, 3-4=-969/554, 4-5=-510/354, 5-6=-526/308
BOT CHORD 12-13=-1138/1972, 11-12=-363/607, 5-11=-274/55
WEBS 2-15=-758/404, 13-15=-357/9, 2-13=-895/1637, 3-12=-1227/637, 4-12=-341/359, 4-11=-340/108, 6-11=-364/709, 6-9=-930/418

NOTES-
1) Wind: ASCE 7-10; Vult=110mph (3-second gust) Vasd=87mph; TCDL=7.2psf; BCDL=4.2psf; h=25ft; Cat. II; Exp C; Enclosed; MWFRS (envelope) and C-C Exterior(2) 0-0-0 to 3-0-0, Interior(1) 3-0-0 to 11-6-0, Exterior(2) 11-6-0 to 14-2-15, Interior(1) 14-2-15 to 19-11-11 zone; cantilever left and right exposed ; porch left and right exposed;C-C for members and forces & MWFRS for reactions shown; Lumber DOL=1.33 plate grip DOL=1.33
2) TCLL: ASCE 7-10; Pf=30.0 psf (flat roof snow); Category II; Exp C; Partially Exp.; Ct=1.00
3) Unbalanced snow loads have been considered for this design.
4) This truss has been designed for a 10.0 psf bottom chord live load nonconcurrent with any other live loads.
5) * This truss has been designed for a live load of 20.0psf on the bottom chord in all areas where a rectangle 3-6-0 tall by 2-0-0 wide will fit between the bottom chord and any other members.
6) A plate rating reduction of 20% has been applied for the green lumber members.
7) Provide mechanical connection (by others) of truss to bearing plate capable of withstanding 100 lb uplift at joint(s) except (jt=lb) 15=133, 9=157.
8) This truss is designed for a creep factor of 3.01, which is used to calculate the Vert(CT) deflection per ANSI/TPI 1.

December 11,2019

WARNING - Verify design parameters and READ NOTES ON THIS AND INCLUDED MITEK REFERENCE PAGE MII-7473 rev. 10/03/2015 BEFORE USE.
Design valid for use only with MiTek® connectors. This design is based only upon parameters shown, and is for an individual building component, not a truss system. Before use, the building designer must verify the applicability of design parameters and properly incorporate this design into the overall building design. Bracing indicated is to prevent buckling of individual truss web and/or chord members only. Additional temporary and permanent bracing is always required for stability and to prevent collapse with possible personal injury and property damage. For general guidance regarding the fabrication, storage, delivery, erection and bracing of trusses and truss systems, see ***ANSI/TPI1 Quality Criteria, DSB-89 and BCSI Building Component Safety Information*** available from Truss Plate Institute, 218 N. Lee Street, Suite 312, Alexandria, VA 22314.

MiTek USA, Inc.
400 Sunrise Avenue, Suite 270
Roseville, CA 95661

Job	Truss	Truss Type	Qty	Ply	ESPINOZA R60548613
J19-319	A05	Roof Special	1	1	Job Reference (optional)

Stockton Truss, STOCKTON, CA 95215 8.330 s Dec 5 2019 MiTek Industries, Inc. Tue Dec 10 11:42:49 2019 Page 1
ID:eURouH3h5RzkGDllLuCRE8yWpf_-FQ2cBj_uM?2EQviSLTbkKeCn?5XhY_QFgAKzKWyANba

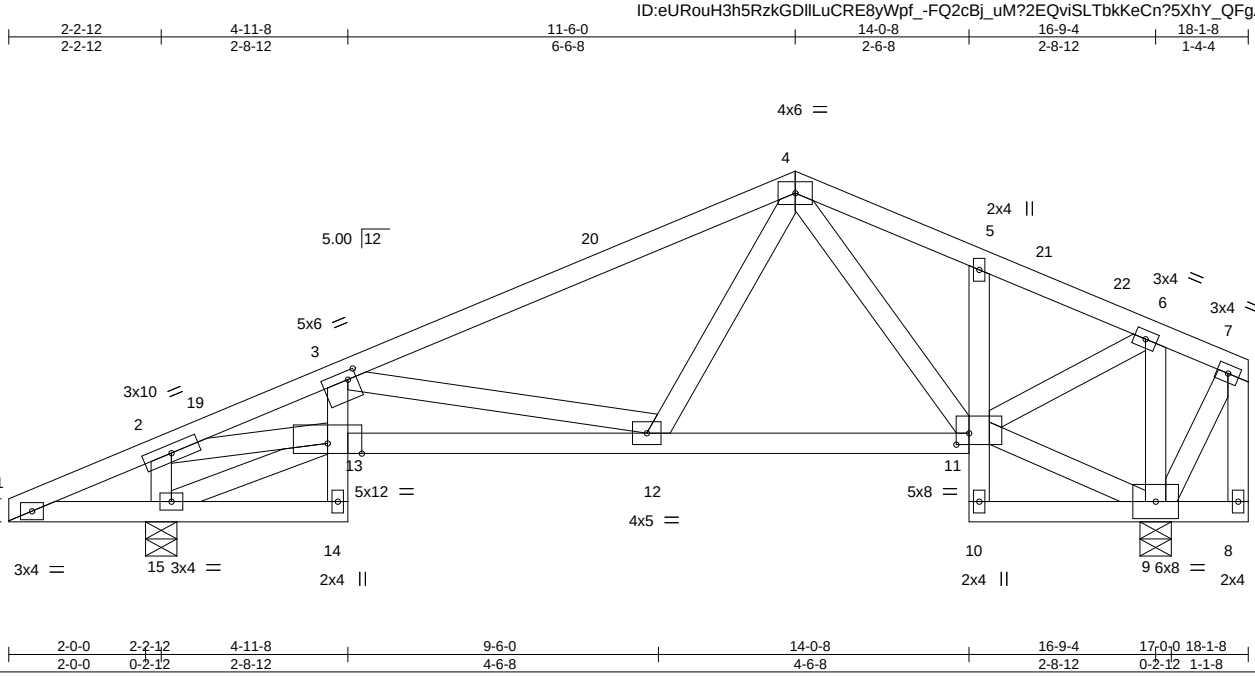

Plate Offsets (X,Y)-- [3:0-1-8,0-1-8], [11:0-2-4,0-2-0]

LOADING (psf)		SPACING-	2-0-0	CSI.		DEFL.	in	(loc)	l/defl	L/d	PLATES	GRIP
TCLL	30.0	Plate Grip DOL	1.15	TC	0.49	Vert(LL)	-0.05	12-13	>999	240	MT20	220/195
(Roof Snow=30.0)		Lumber DOL	1.15	BC	0.40	Vert(CT)	-0.15	12-13	>999	180		
TCDL	14.0	Rep Stress Incr	YES	WB	0.74	Horz(CT)	0.10	9	n/a	n/a		
BCLL	0.0 *	Code	IBC2015/TPI2014	Matrix-MSH		Wind(LL)	0.06	12-13	>999	360	Weight: 101 lb	FT = 20%
BCDL	10.0											

LUMBER-
TOP CHORD 2x4 DF No.1&Btr G
BOT CHORD 2x4 DF No.1&Btr G *Except*
5-10: 2x4 DF Std G
WEBS 2x4 DF Std G

BRACING-
TOP CHORD Structural wood sheathing directly applied or 5-1-10 oc purlins, except end verticals.
BOT CHORD Rigid ceiling directly applied or 5-10-9 oc bracing.

REACTIONS. (lb/size) 15=1039/0-5-8, 9=902/0-5-8
Max Horz 15=115(LC 11)
Max Uplift 15=-131(LC 10), 9=-126(LC 11)

FORCES. (lb) - Max. Comp./Max. Ten. - All forces 250 (lb) or less except when shown.
TOP CHORD 2-3=-1686/1048, 3-4=-1039/622, 4-5=-669/438, 5-6=-678/400
BOT CHORD 3-13=-254/154, 12-13=-1270/1981, 11-12=-448/687, 5-11=-298/61
WEBS 2-15=-783/438, 13-15=-352/0, 2-13=-991/1672, 3-12=-1189/674, 4-12=-359/351, 4-11=-251/37, 6-11=-384/696, 6-9=-815/417

NOTES-
1) Wind: ASCE 7-10; Vult=110mph (3-second gust) Vasd=87mph; TCDL=7.2psf; BCDL=4.2psf; h=25ft; Cat. II; Exp C; Enclosed; MWFRS (envelope) and C-C Exterior(2) 0-0-0 to 3-0-0, Interior(1) 3-0-0 to 11-6-0, Exterior(2) 11-6-0 to 14-2-15, Interior(1) 14-2-15 to 17-11-11 zone; cantilever left and right exposed ; porch left and right exposed;C-C for members and forces & MWFRS for reactions shown; Lumber DOL=1.33 plate grip DOL=1.33
2) TCLL: ASCE 7-10; Pf=30.0 psf (flat roof snow); Category II; Exp C; Partially Exp.; Ct=1.00
3) Unbalanced snow loads have been considered for this design.
4) This truss has been designed for a 10.0 psf bottom chord live load nonconcurrent with any other live loads.
5) * This truss has been designed for a live load of 20.0psf on the bottom chord in all areas where a rectangle 3-6-0 tall by 2-0-0 wide will fit between the bottom chord and any other members.
6) A plate rating reduction of 20% has been applied for the green lumber members.
7) Provide mechanical connection (by others) of truss to bearing plate capable of withstanding 100 lb uplift at joint(s) except (jt=lb) 15=131, 9=126.
8) This truss is designed for a creep factor of 3.01, which is used to calculate the Vert(CT) deflection per ANSI/TPI 1.

December 11,2019

WARNING - Verify design parameters and READ NOTES ON THIS AND INCLUDED MITEK REFERENCE PAGE MII-7473 rev. 10/03/2015 BEFORE USE.
Design valid for use only with MiTek® connectors. This design is based only upon parameters shown, and is for an individual building component, not a truss system. Before use, the building designer must verify the applicability of design parameters and properly incorporate this design into the overall building design. Bracing indicated is to prevent buckling of individual truss web and/or chord members only. Additional temporary and permanent bracing is always required for stability and to prevent collapse with possible personal injury and property damage. For general guidance regarding the fabrication, storage, delivery, erection and bracing of trusses and truss systems, see ***ANSI/TPI1 Quality Criteria, DSB-89 and BCSI Building Component Safety Information*** available from Truss Plate Institute, 218 N. Lee Street, Suite 312, Alexandria, VA 22314.

MiTek USA, Inc.
400 Sunrise Avenue, Suite 270
Roseville, CA 95661

Job	Truss	Truss Type	Qty	Ply	ESPINOZA R60548614
J19-319	A06	Roof Special	2	1	Job Reference (optional)

Stockton Truss, STOCKTON, CA 95215 8.330 s Dec 5 2019 MiTek Industries, Inc. Tue Dec 10 11:42:50 2019 Page 1
ID:eURouH3h5RzkGDllLuCRE8yWpf_-jcb?P3?W7JB523GevA6zsrly5UuAHR0Pvq3XsyyANbZ

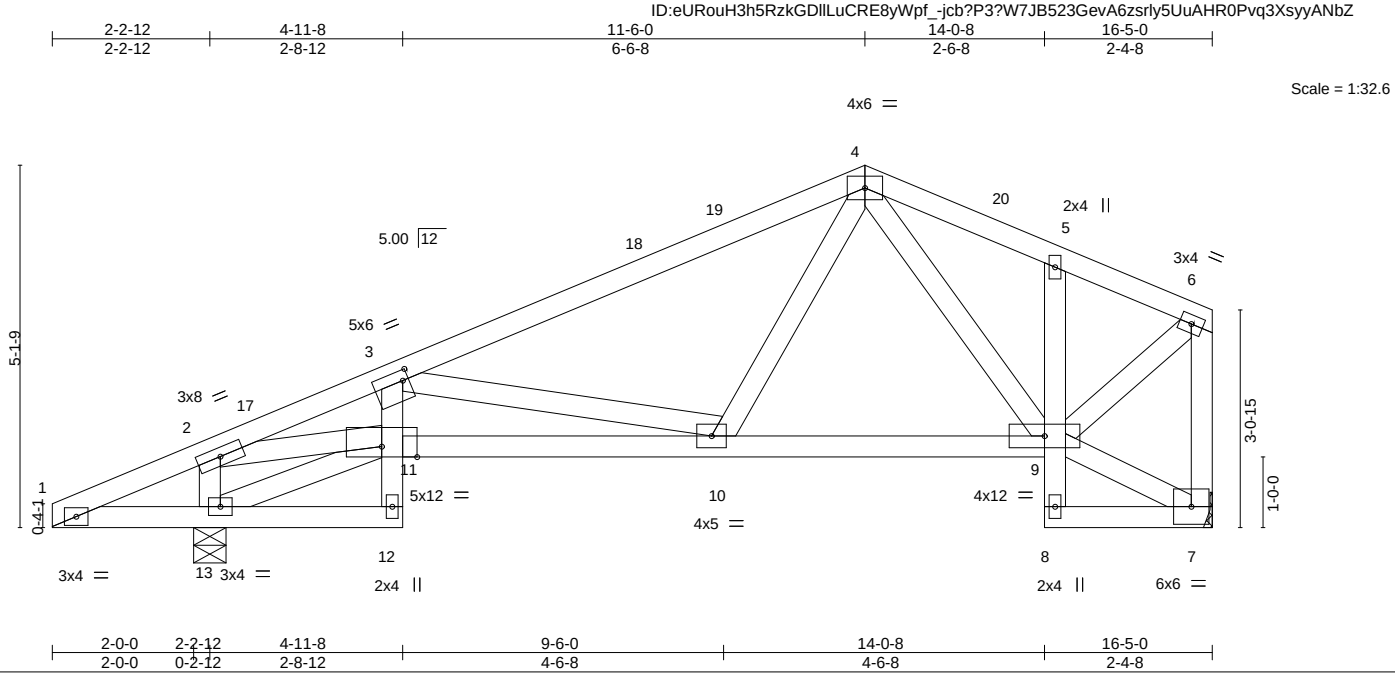

Plate Offsets (X,Y)-- [3:0-1-0,0-1-12]

LOADING (psf)		SPACING-	2-0-0	CSI.		DEFL.	in	(loc)	l/defl	L/d	PLATES	GRIP
TCLL	30.0	Plate Grip DOL	1.15	TC	0.47	Vert(LL)	-0.05	10-11	>999	240	MT20	220/195
(Roof Snow=30.0)		Lumber DOL	1.15	BC	0.38	Vert(CT)	-0.14	10-11	>999	180		
TCDL	14.0	Rep Stress Incr	YES	WB	0.72	Horz(CT)	0.09	7	n/a	n/a		
BCLL	0.0 *	Code	IBC2015/TPI2014	Matrix-MSH		Wind(LL)	0.06	10-11	>999	360	Weight: 90 lb	FT = 20%
BCDL	10.0											

LUMBER-
TOP CHORD 2x4 DF No.1&Btr G
BOT CHORD 2x4 DF No.1&Btr G *Except*
5-8: 2x4 DF Std G
WEBS 2x4 DF Std G

BRACING-
TOP CHORD Structural wood sheathing directly applied or 5-2-11 oc purlins, except end verticals.
BOT CHORD Rigid ceiling directly applied or 6-0-0 oc bracing.

REACTIONS. (lb/size) 13=1018/0-5-8, 7=739/Mechanical
Max Horz 13=111(LC 11)
Max Uplift 13=-124(LC 10), 7=-107(LC 11)

FORCES. (lb) - Max. Comp./Max. Ten. - All forces 250 (lb) or less except when shown.
TOP CHORD 2-3=-1627/1015, 3-4=-984/602, 4-5=-569/388, 5-6=-561/344, 6-7=-714/417
BOT CHORD 10-11=-1217/1921, 9-10=-402/635, 5-9=-283/59
WEBS 2-13=-764/423, 11-13=-346/0, 2-11=-964/1621, 3-10=-1155/665, 4-10=-363/347, 4-9=-299/82, 6-9=-386/641

NOTES-
1) Wind: ASCE 7-10; Vult=110mph (3-second gust) Vasd=87mph; TCDL=7.2psf; BCDL=4.2psf; h=25ft; Cat. II; Exp C; Enclosed; MWFRS (envelope) and C-C Exterior(2) 0-0-0 to 3-0-0, Interior(1) 3-0-0 to 11-6-0, Exterior(2) 11-6-0 to 14-2-15, Interior(1) 14-2-15 to 16-3-3 zone; cantilever left and right exposed ; porch left and right exposed;C-C for members and forces & MWFRS for reactions shown; Lumber DOL=1.33 plate grip DOL=1.33
2) TCLL: ASCE 7-10; Pf=30.0 psf (flat roof snow); Category II; Exp C; Partially Exp.; Ct=1.00
3) Unbalanced snow loads have been considered for this design.
4) This truss has been designed for a 10.0 psf bottom chord live load nonconcurrent with any other live loads.
5) * This truss has been designed for a live load of 20.0psf on the bottom chord in all areas where a rectangle 3-6-0 tall by 2-0-0 wide will fit between the bottom chord and any other members.
6) A plate rating reduction of 20% has been applied for the green lumber members.
7) Refer to girder(s) for truss to truss connections.
8) Provide mechanical connection (by others) of truss to bearing plate capable of withstanding 100 lb uplift at joint(s) except (jt=lb) 13=124, 7=107.
9) This truss is designed for a creep factor of 3.01, which is used to calculate the Vert(CT) deflection per ANSI/TPI 1.

December 11,2019

WARNING - Verify design parameters and READ NOTES ON THIS AND INCLUDED MITEK REFERENCE PAGE MII-7473 rev. 10/03/2015 BEFORE USE.
Design valid for use only with MiTek® connectors. This design is based only upon parameters shown, and is for an individual building component, not a truss system. Before use, the building designer must verify the applicability of design parameters and properly incorporate this design into the overall building design. Bracing indicated is to prevent buckling of individual truss web and/or chord members only. Additional temporary and permanent bracing is always required for stability and to prevent collapse with possible personal injury and property damage. For general guidance regarding the fabrication, storage, delivery, erection and bracing of trusses and truss systems, see ***ANSI/TPI1 Quality Criteria, DSB-89 and BCSI Building Component Safety Information*** available from Truss Plate Institute, 218 N. Lee Street, Suite 312, Alexandria, VA 22314.

MiTek USA, Inc.
400 Sunrise Avenue, Suite 270
Roseville, CA 95661

Job	Truss	Truss Type	Qty	Ply	ESPINOZA R60548615
J19-319	A07	Common	1	1	Job Reference (optional)

Stockton Truss, STOCKTON, CA 95215 8.330 s Dec 5 2019 MiTek Industries, Inc. Tue Dec 10 11:42:51 2019 Page 1
ID:eURouH3h5RzkGDllLuCRE8yWpf_-Bo9NcP08ucJygDrrTudCP3I68uEq0yhY8Up4POyANbY

6-1-1 11-6-0 16-5-0
6-1-1 5-4-15 4-11-0

Scale = 1:31.5

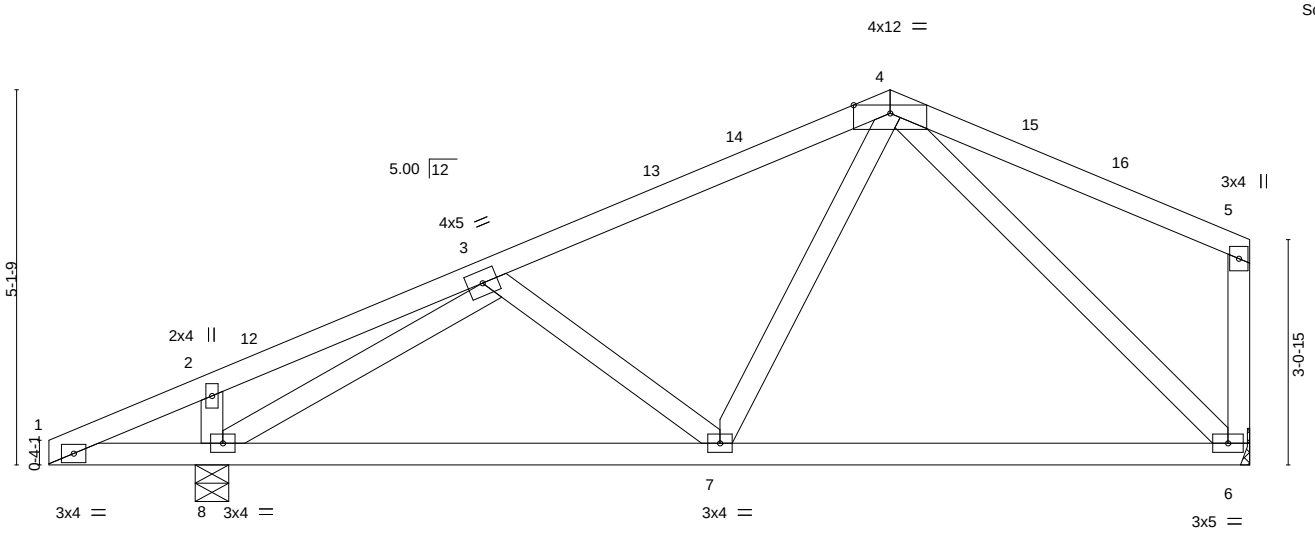

2-0-0 2-2-12 9-2-1 16-5-0
2-0-0 0-2-12 6-11-5 7-2-14

LOADING (psf)		SPACING-	2-0-0	CSI.		DEFL.	in	(loc)	l/defl	L/d	PLATES	GRIP
TCLL	30.0	Plate Grip DOL	1.15	TC	0.52	Vert(LL)	-0.05	6-7	>999	240	MT20	220/195
(Roof Snow=30.0)		Lumber DOL	1.15	BC	0.29	Vert(CT)	-0.15	6-7	>999	180		
TCDL	14.0	Rep Stress Incr	YES	WB	0.50	Horz(CT)	0.02	6	n/a	n/a		
BCLL	0.0 *	Code	IBC2015/TPI2014	Matrix-MSH		Wind(LL)	0.08	6-7	>999	360	Weight: 79 lb	FT = 20%
BCDL	10.0											

LUMBER-
TOP CHORD 2x4 DF No.1&Btr G
BOT CHORD 2x4 DF No.1&Btr G
WEBS 2x4 DF Std G

BRACING-
TOP CHORD Structural wood sheathing directly applied or 6-0-0 oc purlins, except end verticals.
BOT CHORD Rigid ceiling directly applied or 6-0-0 oc bracing.

REACTIONS. (lb/size) 6=739/Mechanical, 8=1018/0-5-8
Max Horz 8=92(LC 14)
Max Uplift 6=-105(LC 11), 8=-126(LC 10)

FORCES. (lb) - Max. Comp./Max. Ten. - All forces 250 (lb) or less except when shown.
TOP CHORD 3-4=-783/493, 5-6=-295/89
BOT CHORD 7-8=-433/811, 6-7=-256/494
WEBS 3-7=-251/87, 4-7=-358/357, 3-8=-1109/437, 2-8=-253/71, 4-6=-646/317

NOTES-
1) Wind: ASCE 7-10; Vult=110mph (3-second gust) Vasd=87mph; TCDL=7.2psf; BCDL=4.2psf; h=25ft; Cat. II; Exp C; Enclosed; MWFRS (envelope) and C-C Exterior(2) 0-0-0 to 3-0-0, Interior(1) 3-0-0 to 11-6-0, Exterior(2) 11-6-0 to 14-6-0, Interior(1) 14-6-0 to 16-3-3 zone; cantilever left and right exposed ; porch left and right exposed;C-C for members and forces & MWFRS for reactions shown; Lumber DOL=1.33 plate grip DOL=1.33
2) TCLL: ASCE 7-10; Pf=30.0 psf (flat roof snow); Category II; Exp C; Partially Exp.; Ct=1.00
3) Unbalanced snow loads have been considered for this design.
4) This truss has been designed for a 10.0 psf bottom chord live load nonconcurrent with any other live loads.
5) * This truss has been designed for a live load of 20.0psf on the bottom chord in all areas where a rectangle 3-6-0 tall by 2-0-0 wide will fit between the bottom chord and any other members.
6) A plate rating reduction of 20% has been applied for the green lumber members.
7) Refer to girder(s) for truss to truss connections.
8) Provide mechanical connection (by others) of truss to bearing plate capable of withstanding 100 lb uplift at joint(s) except (jt=lb) 6=105, 8=126.
9) This truss is designed for a creep factor of 3.01, which is used to calculate the Vert(CT) deflection per ANSI/TPI 1.

December 11,2019

WARNING - Verify design parameters and READ NOTES ON THIS AND INCLUDED MITEK REFERENCE PAGE MII-7473 rev. 10/03/2015 BEFORE USE.
Design valid for use only with MiTek® connectors. This design is based only upon parameters shown, and is for an individual building component, not a truss system. Before use, the building designer must verify the applicability of design parameters and properly incorporate this design into the overall building design. Bracing indicated is to prevent buckling of individual truss web and/or chord members only. Additional temporary and permanent bracing is always required for stability and to prevent collapse with possible personal injury and property damage. For general guidance regarding the fabrication, storage, delivery, erection and bracing of trusses and truss systems, see ***ANSI/TPI1 Quality Criteria, DSB-89 and BCSI Building Component Safety Information*** available from Truss Plate Institute, 218 N. Lee Street, Suite 312, Alexandria, VA 22314.

MiTek USA, Inc.
400 Sunrise Avenue, Suite 270
Roseville, CA 95661

Job	Truss	Truss Type	Qty	Ply	ESPINOZA R60548616
J19-319	B01	Half Hip	1	1	Job Reference (optional)

Stockton Truss, STOCKTON, CA 95215 8.330 s Dec 5 2019 MiTek Industries, Inc. Tue Dec 10 11:42:52 2019 Page 1
ID:eURouH3h5RzkGDllLuCRE8yWpf_-f?jlql1mfwRpHMQ10b9RxGqJJlbPlLRiM8YdxryANbX

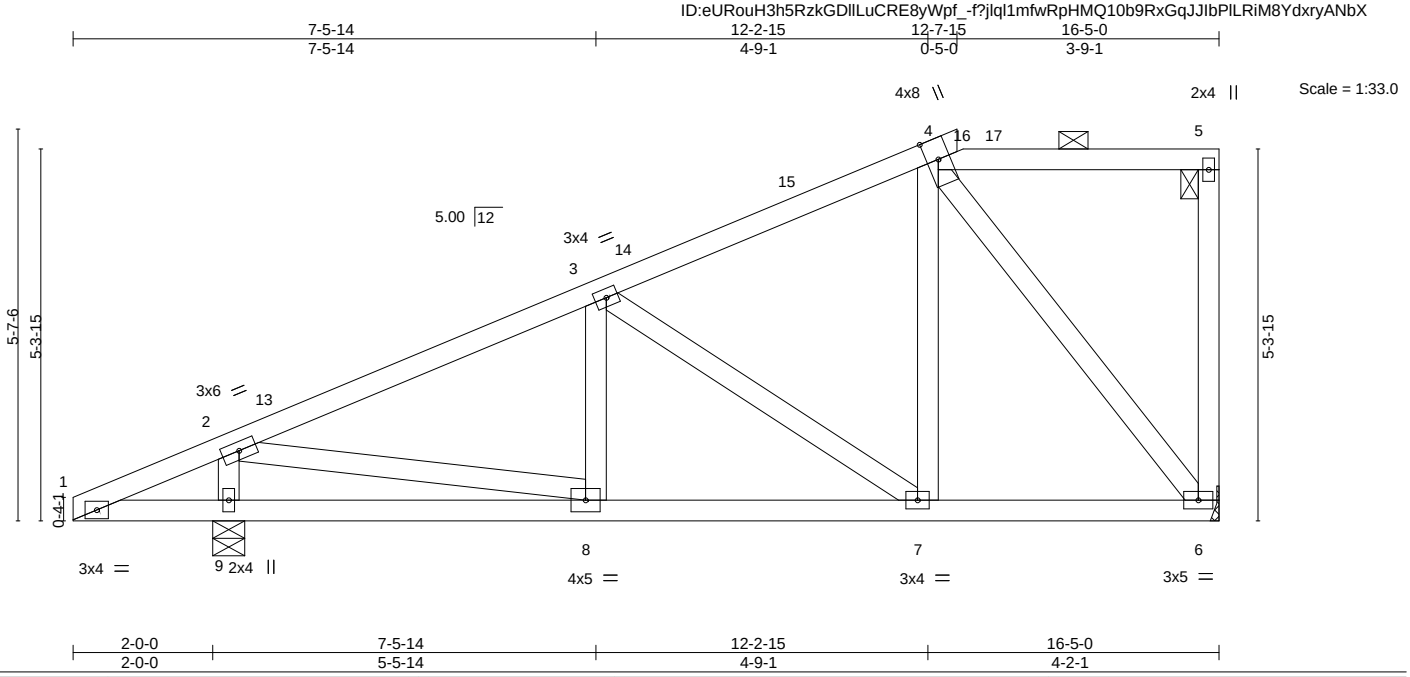

LOADING (psf)		SPACING-	2-0-0	CSI.		DEFL.	in	(loc)	l/defl	L/d	PLATES	GRIP
TCLL	30.0	Plate Grip DOL	1.15	TC	0.43	Vert(LL)	-0.03	7-8	>999	240	MT20	220/195
(Roof Snow=30.0)		Lumber DOL	1.15	BC	0.20	Vert(CT)	-0.07	7-8	>999	180		
TCDL	14.0	Rep Stress Incr	YES	WB	0.72	Horz(CT)	0.01	6	n/a	n/a		
BCLL	0.0 *	Code IBC2015/TPI2014		Matrix-MSH		Wind(LL)	0.03	8-9	>999	360	Weight: 88 lb	FT = 20%
BCDL	10.0											

LUMBER-
TOP CHORD 2x4 DF No.1&Btr G
BOT CHORD 2x4 DF No.1&Btr G
WEBS 2x4 DF Std G

BRACING-
TOP CHORD Structural wood sheathing directly applied or 5-4-12 oc purlins, except end verticals, and 2-0-0 oc purlins (6-0-0 max.): 4-5.
BOT CHORD Rigid ceiling directly applied or 6-0-0 oc bracing.

REACTIONS. (lb/size) 6=883/Mechanical, 9=1065/0-5-8
Max Horz 9=130(LC 14)
Max Uplift 6=-172(LC 11), 9=-129(LC 10)
Max Grav 6=937(LC 29), 9=1489(LC 29)

FORCES. (lb) - Max. Comp./Max. Ten. - All forces 250 (lb) or less except when shown.
TOP CHORD 2-3=-1430/469, 3-4=-829/284, 5-6=-271/46
BOT CHORD 7-8=-529/1195, 6-7=-280/633
WEBS 3-7=-658/287, 4-7=-343/459, 4-6=-1026/451, 2-8=-398/1263, 2-9=-1385/337

NOTES-
1) Wind: ASCE 7-10; Vult=110mph (3-second gust) Vasd=87mph; TCDL=7.2psf; BCDL=4.2psf; h=25ft; Cat. II; Exp C; Enclosed; MWFRS (envelope) and C-C Exterior(2) 0-0-0 to 3-0-0, Interior(1) 3-0-0 to 12-4-12, Exterior(2) 12-4-12 to 16-3-3 zone; cantilever left and right exposed ; porch left and right exposed;C-C for members and forces & MWFRS for reactions shown; Lumber DOL=1.33 plate grip DOL=1.33
2) TCLL: ASCE 7-10; Pf=30.0 psf (flat roof snow); Category II; Exp C; Partially Exp.; Ct=1.00
3) Unbalanced snow loads have been considered for this design.
4) Provide adequate drainage to prevent water ponding.
5) This truss has been designed for a 10.0 psf bottom chord live load nonconcurrent with any other live loads.
6) * This truss has been designed for a live load of 20.0psf on the bottom chord in all areas where a rectangle 3-6-0 tall by 2-0-0 wide will fit between the bottom chord and any other members.
7) A plate rating reduction of 20% has been applied for the green lumber members.
8) Refer to girder(s) for truss to truss connections.
9) Provide mechanical connection (by others) of truss to bearing plate capable of withstanding 100 lb uplift at joint(s) except (jt=lb) 6=172, 9=129.
10) Graphical purlin representation does not depict the size or the orientation of the purlin along the top and/or bottom chord.
11) Hanger(s) or other connection device(s) shall be provided sufficient to support concentrated load(s) 287 lb down and 175 lb up at 12-9-12 on top chord. The design/selection of such connection device(s) is the responsibility of others.
12) This truss is designed for a creep factor of 3.01, which is used to calculate the Vert(CT) deflection per ANSI/TPI 1.

LOAD CASE(S) Standard
1) Dead + Snow (balanced): Lumber Increase=1.15, Plate Increase=1.15
Uniform Loads (plf)
Vert: 1-4=-88, 4-5=-88, 6-10=-20
Concentrated Loads (lb)
Vert: 16=-191

December 11,2019

WARNING - Verify design parameters and READ NOTES ON THIS AND INCLUDED MITEK REFERENCE PAGE MII-7473 rev. 10/03/2015 BEFORE USE.
Design valid for use only with MiTek® connectors. This design is based only upon parameters shown, and is for an individual building component, not a truss system. Before use, the building designer must verify the applicability of design parameters and properly incorporate this design into the overall building design. Bracing indicated is to prevent buckling of individual truss web and/or chord members only. Additional temporary and permanent bracing is always required for stability and to prevent collapse with possible personal injury and property damage. For general guidance regarding the fabrication, storage, delivery, erection and bracing of trusses and truss systems, see ***ANSI/TPI1 Quality Criteria, DSB-89 and BCSI Building Component Safety Information*** available from Truss Plate Institute, 218 N. Lee Street, Suite 312, Alexandria, VA 22314.

MiTek USA, Inc.
400 Sunrise Avenue, Suite 270
Roseville, CA 95661

Job	Truss	Truss Type	Qty	Ply	ESPINOZA R60548617
J19-319	B02	Half Hip	1	1	Job Reference (optional)

Stockton Truss, STOCKTON, CA 95215 8.330 s Dec 5 2019 MiTek Industries, Inc. Tue Dec 10 11:42:53 2019 Page 1
ID:eURouH3h5RzkGDllLuCRE8yWpf_-7BH7151OQEZgvW?DaJggUUNPaiwiUmyrboIBTHyANbW

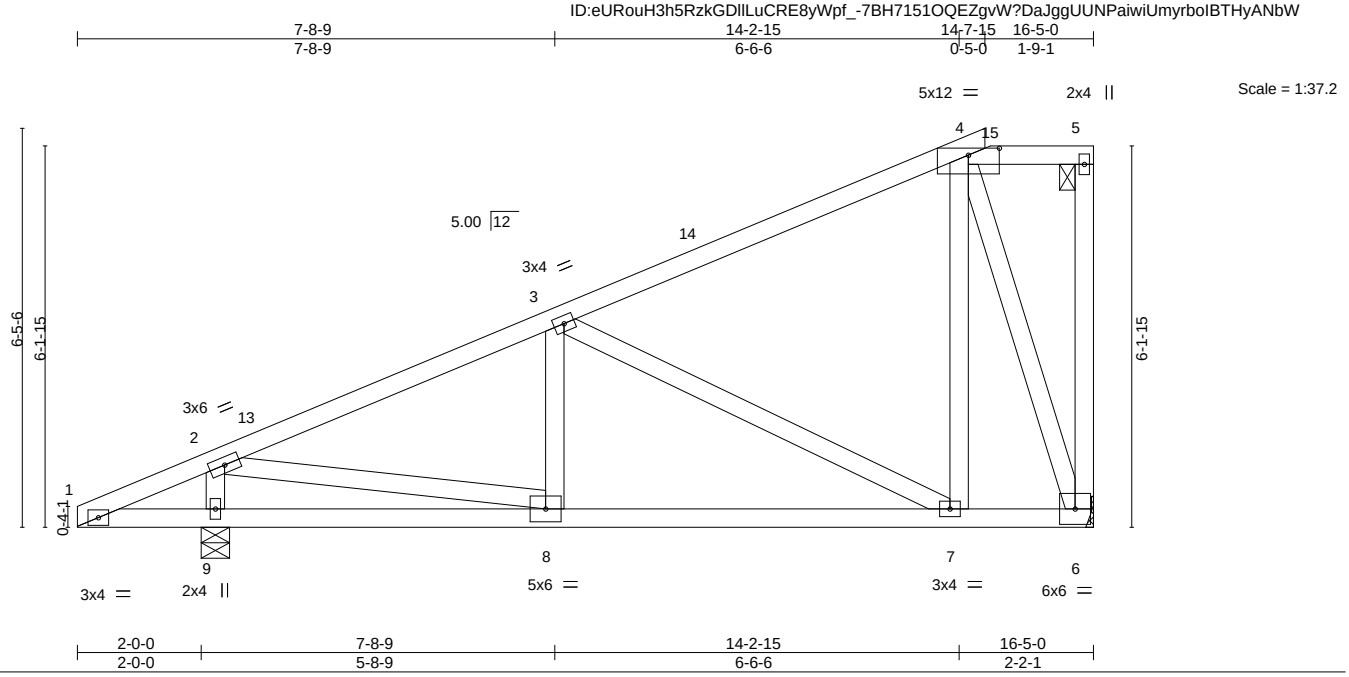

Plate Offsets (X,Y)-- [4:0-6-0,0-1-6]

LOADING (psf)		SPACING-	2-0-0	CSI.		DEFL.	in	(loc)	l/defl	L/d	PLATES	GRIP
TCLL	30.0	Plate Grip DOL	1.15	TC	0.71	Vert(LL)	-0.04	7-8	>999	240	MT20	220/195
(Roof Snow=30.0)		Lumber DOL	1.15	BC	0.26	Vert(CT)	-0.13	7-8	>999	180		
TCDL	14.0	Rep Stress Incr	YES	WB	0.90	Horz(CT)	0.01	6	n/a	n/a		
BCLL	0.0 *	Code	IBC2015/TPI2014	Matrix-MSH		Wind(LL)	0.06	7-8	>999	360	Weight: 93 lb	FT = 20%
BCDL	10.0											

LUMBER-
TOP CHORD 2x4 DF No.1&Btr G
BOT CHORD 2x4 DF No.1&Btr G
WEBS 2x4 DF Std G

BRACING-
TOP CHORD Structural wood sheathing directly applied or 5-1-14 oc purlins, except end verticals, and 2-0-0 oc purlins (6-0-0 max.): 4-5.
BOT CHORD Rigid ceiling directly applied or 6-0-0 oc bracing.

REACTIONS. (lb/size) 6=910/Mechanical, 9=1038/0-5-8
Max Horz 9=152(LC 14)
Max Uplift 6=-174(LC 11), 9=-113(LC 10)
Max Grav 6=1113(LC 29), 9=1496(LC 29)

FORCES. (lb) - Max. Comp./Max. Ten. - All forces 250 (lb) or less except when shown.
TOP CHORD 2-3=-1487/449, 3-4=-594/142
BOT CHORD 7-8=-536/1257, 6-7=-156/368
WEBS 3-7=-977/413, 4-7=-404/544, 4-6=-1204/512, 2-8=-397/1360, 2-9=-1384/333

NOTES-
1) Wind: ASCE 7-10; Vult=110mph (3-second gust) Vasd=87mph; TCDL=7.2psf; BCDL=4.2psf; h=25ft; Cat. II; Exp C; Enclosed; MWFRS (envelope) and C-C Exterior(2) 0-0-0 to 3-0-0, Interior(1) 3-0-0 to 14-4-12, Exterior(2) 14-4-12 to 16-3-3 zone; cantilever left and right exposed ; porch left and right exposed;C-C for members and forces & MWFRS for reactions shown; Lumber DOL=1.33 plate grip DOL=1.33
2) TCLL: ASCE 7-10; Pf=30.0 psf (flat roof snow); Category II; Exp C; Partially Exp.; Ct=1.00
3) Unbalanced snow loads have been considered for this design.
4) Provide adequate drainage to prevent water ponding.
5) This truss has been designed for a 10.0 psf bottom chord live load nonconcurrent with any other live loads.
6) * This truss has been designed for a live load of 20.0psf on the bottom chord in all areas where a rectangle 3-6-0 tall by 2-0-0 wide will fit between the bottom chord and any other members.
7) A plate rating reduction of 20% has been applied for the green lumber members.
8) Refer to girder(s) for truss to truss connections.
9) Provide mechanical connection (by others) of truss to bearing plate capable of withstanding 100 lb uplift at joint(s) except (jt=lb) 6=174, 9=113.
10) Graphical purlin representation does not depict the size or the orientation of the purlin along the top and/or bottom chord.
11) Hanger(s) or other connection device(s) shall be provided sufficient to support concentrated load(s) 287 lb down and 175 lb up at 14-9-12 on top chord. The design/selection of such connection device(s) is the responsibility of others.
12) This truss is designed for a creep factor of 3.01, which is used to calculate the Vert(CT) deflection per ANSI/TPI 1.

LOAD CASE(S) Standard
1) Dead + Snow (balanced): Lumber Increase=1.15, Plate Increase=1.15
Uniform Loads (plf)
Vert: 1-4=-88, 4-5=-88, 6-10=-20

December 11,2019

Continued on page 2

WARNING - Verify design parameters and READ NOTES ON THIS AND INCLUDED MITEK REFERENCE PAGE MII-7473 rev. 10/03/2015 BEFORE USE.
Design valid for use only with MiTek® connectors. This design is based only upon parameters shown, and is for an individual building component, not a truss system. Before use, the building designer must verify the applicability of design parameters and properly incorporate this design into the overall building design. Bracing indicated is to prevent buckling of individual truss web and/or chord members only. Additional temporary and permanent bracing is always required for stability and to prevent collapse with possible personal injury and property damage. For general guidance regarding the fabrication, storage, delivery, erection and bracing of trusses and truss systems, see ***ANSI/TPI1 Quality Criteria, DSB-89 and BCSI Building Component Safety Information*** available from Truss Plate Institute, 218 N. Lee Street, Suite 312, Alexandria, VA 22314.

MiTek USA, Inc.
400 Sunrise Avenue, Suite 270
Roseville, CA 95661

LOAD CASE(S) Standard
Concentrated Loads (lb)
Vert: 15=-191

WARNING - Verify design parameters and READ NOTES ON THIS AND INCLUDED MITEK REFERENCE PAGE MII-7473 rev. 10/03/2015 BEFORE USE.
Design valid for use only with MiTek® connectors. This design is based only upon parameters shown, and is for an individual building component, not a truss system. Before use, the building designer must verify the applicability of design parameters and properly incorporate this design into the overall building design. Bracing indicated is to prevent buckling of individual truss web and/or chord members only. Additional temporary and permanent bracing is always required for stability and to prevent collapse with possible personal injury and property damage. For general guidance regarding the fabrication, storage, delivery, erection and bracing of trusses and truss systems, see ***ANSI/TPI1 Quality Criteria, DSB-89 and BCSI Building Component Safety Information*** available from Truss Plate Institute, 218 N. Lee Street, Suite 312, Alexandria, VA 22314.

MiTek USA, Inc.
400 Sunrise Avenue, Suite 270
Roseville, CA 95661

Job	Truss	Truss Type	Qty	Ply	ESPINOZA R60548618
J19-319	B03	Roof Special	1	1	Job Reference (optional)

Stockton Truss, STOCKTON, CA 95215 8.330 s Dec 5 2019 MiTek Industries, Inc. Tue Dec 10 11:42:54 2019 Page 1

ID:eURouH3h5RzkGDllLuCRE8yWpf_-bNrVER20AXhXXgaP80Bv1hwc16GSDFg?qS1k?jyANbV

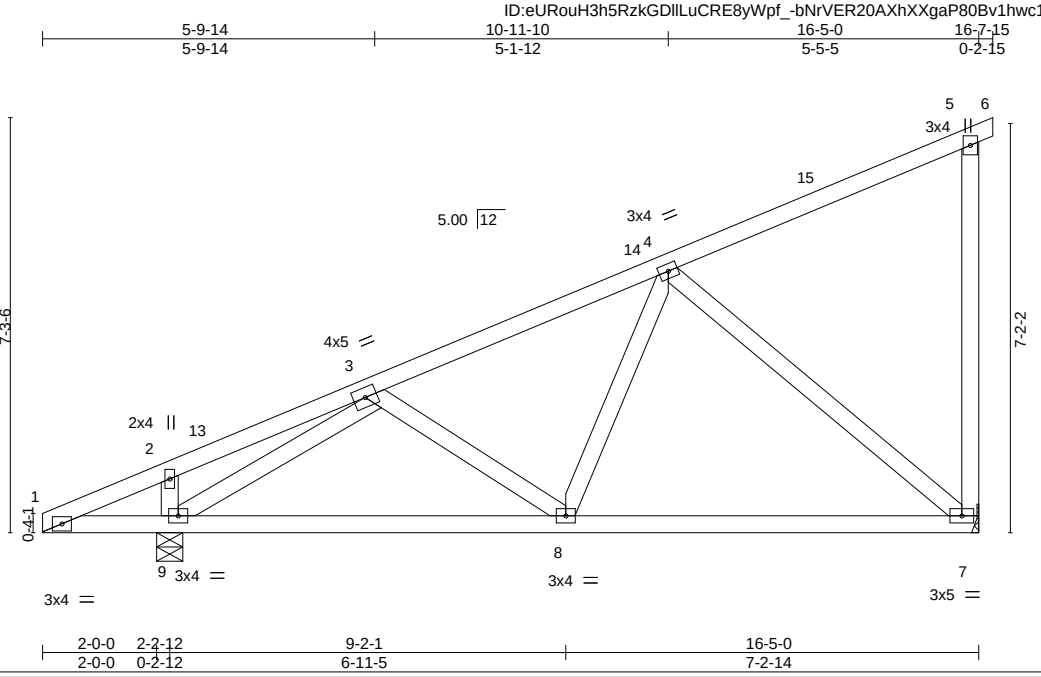

LOADING (psf)		SPACING-	2-0-0	CSI.		DEFL.	in	(loc)	l/defl	L/d	PLATES	GRIP
TCLL	30.0	Plate Grip DOL	1.15	TC	0.54	Vert(LL)	-0.05	7-8	>999	240	MT20	220/195
(Roof Snow=30.0)		Lumber DOL	1.15	BC	0.29	Vert(CT)	-0.17	7-8	>999	180		
TCDL	14.0	Rep Stress Incr	YES	WB	0.74	Horz(CT)	0.02	7	n/a	n/a		
BCLL	0.0 *	Code	IBC2015/TPI2014	Matrix-MSH		Wind(LL)	0.09	7-8	>999	360	Weight: 85 lb	FT = 20%
BCDL	10.0											

LUMBER-

TOP CHORD	2x4 DF No.1&Btr G
BOT CHORD	2x4 DF No.1&Btr G
WEBS	2x4 DF Std G

BRACING-

TOP CHORD	Structural wood sheathing directly applied or 6-0-0 oc purlins, except end verticals.
BOT CHORD	Rigid ceiling directly applied or 6-0-0 oc bracing.

REACTIONS. (lb/size) 7=774/Mechanical, 9=1017/0-5-8
Max Horz 9=180(LC 14)
Max Uplift 7=-142(LC 11), 9=-99(LC 10)
Max Grav 7=955(LC 21), 9=1059(LC 21)

FORCES. (lb) - Max. Comp./Max. Ten. - All forces 250 (lb) or less except when shown.
TOP CHORD 3-4=-880/367, 5-7=-331/82
BOT CHORD 8-9=-456/829, 7-8=-319/663
WEBS 4-8=-343/330, 4-7=-855/409, 3-9=-1127/323, 2-9=-278/70

NOTES-

1) Wind: ASCE 7-10; Vult=110mph (3-second gust) Vasd=87mph; TCDL=7.2psf; BCDL=4.2psf; h=25ft; Cat. II; Exp C; Enclosed; MWFRS (envelope) and C-C Exterior(2) 0-0-0 to 3-0-0, Interior(1) 3-0-0 to 16-7-15 zone; cantilever left and right exposed ; porch left and right exposed;C-C for members and forces & MWFRS for reactions shown; Lumber DOL=1.33 plate grip DOL=1.33
2) TCLL: ASCE 7-10; Pf=30.0 psf (flat roof snow); Category II; Exp C; Partially Exp.; Ct=1.00
3) Unbalanced snow loads have been considered for this design.
4) This truss has been designed for greater of min roof live load of 19.0 psf or 1.00 times flat roof load of 30.0 psf on overhangs non-concurrent with other live loads.
5) This truss has been designed for a 10.0 psf bottom chord live load nonconcurrent with any other live loads.
6) * This truss has been designed for a live load of 20.0psf on the bottom chord in all areas where a rectangle 3-6-0 tall by 2-0-0 wide will fit between the bottom chord and any other members.
7) A plate rating reduction of 20% has been applied for the green lumber members.
8) Refer to girder(s) for truss to truss connections.
9) Provide mechanical connection (by others) of truss to bearing plate capable of withstanding 100 lb uplift at joint(s) 9 except (jt=lb) 7=142.
10) This truss is designed for a creep factor of 3.01, which is used to calculate the Vert(CT) deflection per ANSI/TPI 1.

December 11,2019

WARNING - Verify design parameters and READ NOTES ON THIS AND INCLUDED MITEK REFERENCE PAGE MII-7473 rev. 10/03/2015 BEFORE USE.
Design valid for use only with MiTek® connectors. This design is based only upon parameters shown, and is for an individual building component, not a truss system. Before use, the building designer must verify the applicability of design parameters and properly incorporate this design into the overall building design. Bracing indicated is to prevent buckling of individual truss web and/or chord members only. Additional temporary and permanent bracing is always required for stability and to prevent collapse with possible personal injury and property damage. For general guidance regarding the fabrication, storage, delivery, erection and bracing of trusses and truss systems, see ***ANSI/TPI1 Quality Criteria, DSB-89 and BCSI Building Component Safety Information*** available from Truss Plate Institute, 218 N. Lee Street, Suite 312, Alexandria, VA 22314.

MiTek USA, Inc.
400 Sunrise Avenue, Suite 270
Roseville, CA 95661

Job	Truss	Truss Type	Qty	Ply	ESPINOZA R60548619
J19-319	B04	Roof Special	1	1	Job Reference (optional)

Stockton Truss, STOCKTON, CA 95215 8.330 s Dec 5 2019 MiTek Industries, Inc. Tue Dec 10 11:42:55 2019 Page 1
ID:eURouH3h5RzkGDllLuCRE8yWpf_-3aPuSn3fxrpO8q9ciki8ZvSqQVcuykl836nHYAyANbU

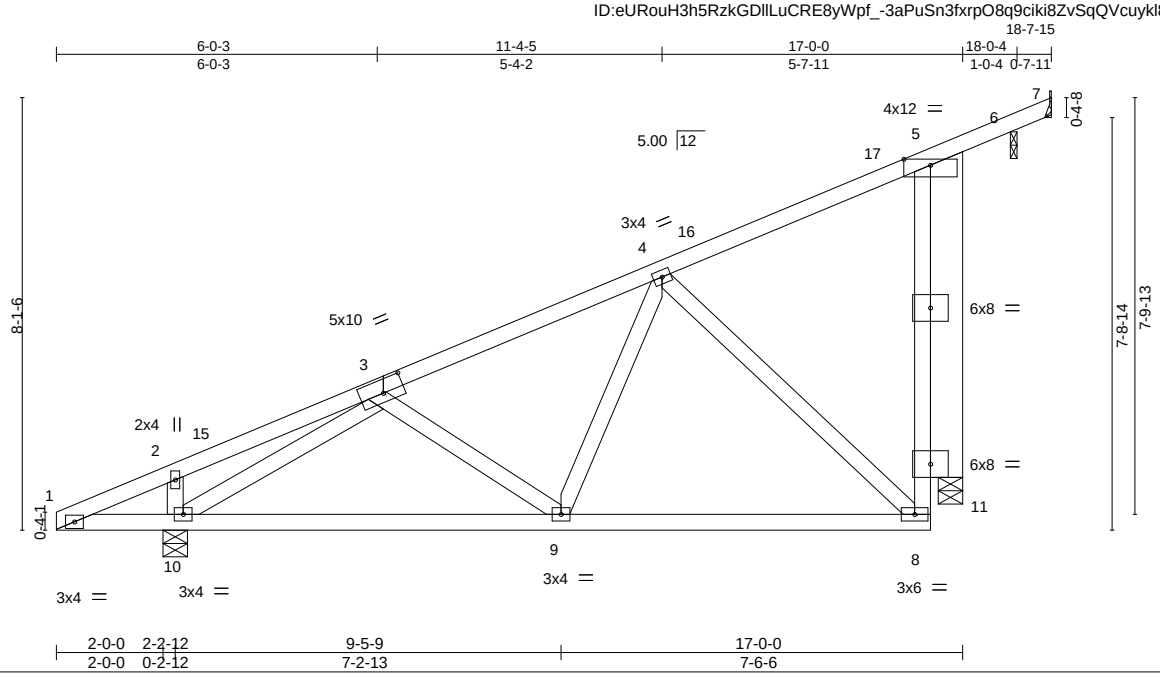

Plate Offsets (X,Y)-- [3:0-4-12,0-3-0]

LOADING (psf)		SPACING-	2-0-0	CSI.		DEFL.	in	(loc)	l/defl	L/d	PLATES	GRIP
TCLL	30.0	Plate Grip DOL	1.15	TC	0.37	Vert(LL)	-0.04	8-9	>999	240	MT20	220/195
(Roof Snow=30.0)		Lumber DOL	1.15	BC	0.28	Vert(CT)	-0.12	8-9	>999	180		
TCDL	14.0	Rep Stress Incr	YES	WB	0.62	Horz(CT)	-0.01	7	n/a	n/a		
BCLL	0.0 *	Code	IBC2015/TPI2014	Matrix-MSH		Wind(LL)	0.06	9-10	>999	360	Weight: 105 lb	FT = 20%
BCDL	10.0											

LUMBER-
TOP CHORD 2x4 DF No.1&Btr G
BOT CHORD 2x4 DF No.1&Btr G
WEBS 2x4 DF Std G
OTHERS 2x8 DF SS

BRACING-
TOP CHORD Structural wood sheathing directly applied or 6-0-0 oc purlins.
BOT CHORD Rigid ceiling directly applied or 6-0-0 oc bracing.

REACTIONS. All bearings 0-5-8 except (jt=length) 7=Mechanical, 6=0-1-8.
(lb) - Max Horz 10=272(LC 11)
Max Uplift All uplift 100 lb or less at joint(s) 7, 10, 6 except 11=-195(LC 11)
Max Grav All reactions 250 lb or less at joint(s) 7, 6 except 10=1029(LC 21), 11=1095(LC 21)

FORCES. (lb) - Max. Comp./Max. Ten. - All forces 250 (lb) or less except when shown.
TOP CHORD 3-4=-795/140, 4-5=-294/116
BOT CHORD 8-11=-400/593, 5-11=-500/219, 9-10=-677/805, 8-9=-473/557
WEBS 4-9=-376/341, 4-8=-763/404, 3-10=-1058/102, 2-10=-296/64

NOTES-
1) Wind: ASCE 7-10; Vult=110mph (3-second gust) Vasd=87mph; TCDL=7.2psf; BCDL=4.2psf; h=25ft; Cat. II; Exp C; Enclosed; MWFRS (envelope) and C-C Exterior(2) 0-0-0 to 3-0-0, Interior(1) 3-0-0 to 18-7-3 zone; cantilever left and right exposed ; porch left and right exposed;C-C for members and forces & MWFRS for reactions shown; Lumber DOL=1.33 plate grip DOL=1.33
2) TCLL: ASCE 7-10; Pf=30.0 psf (flat roof snow); Category II; Exp C; Partially Exp.; Ct=1.00
3) Unbalanced snow loads have been considered for this design.
4) This truss has been designed for a 10.0 psf bottom chord live load nonconcurrent with any other live loads.
5) * This truss has been designed for a live load of 20.0psf on the bottom chord in all areas where a rectangle 3-6-0 tall by 2-0-0 wide will fit between the bottom chord and any other members.
6) A plate rating reduction of 20% has been applied for the green lumber members.
7) Refer to girder(s) for truss to truss connections.
8) Bearing at joint(s) 11 considers parallel to grain value using ANSI/TPI 1 angle to grain formula. Building designer should verify capacity of bearing surface.
9) Provide mechanical connection (by others) of truss to bearing plate at joint(s) 6.
10) Provide mechanical connection (by others) of truss to bearing plate capable of withstanding 100 lb uplift at joint(s) 7, 10, 6 except (jt=lb) 11=195.
11) Beveled plate or shim required to provide full bearing surface with truss chord at joint(s) 6.
12) This truss is designed for a creep factor of 3.01, which is used to calculate the Vert(CT) deflection per ANSI/TPI 1.

December 11,2019

WARNING - Verify design parameters and READ NOTES ON THIS AND INCLUDED MITEK REFERENCE PAGE MII-7473 rev. 10/03/2015 BEFORE USE.
Design valid for use only with MiTek® connectors. This design is based only upon parameters shown, and is for an individual building component, not a truss system. Before use, the building designer must verify the applicability of design parameters and properly incorporate this design into the overall building design. Bracing indicated is to prevent buckling of individual truss web and/or chord members only. Additional temporary and permanent bracing is always required for stability and to prevent collapse with possible personal injury and property damage. For general guidance regarding the fabrication, storage, delivery, erection and bracing of trusses and truss systems, see ***ANSI/TPI1 Quality Criteria, DSB-89 and BCSI Building Component Safety Information*** available from Truss Plate Institute, 218 N. Lee Street, Suite 312, Alexandria, VA 22314.

MiTek USA, Inc.
400 Sunrise Avenue, Suite 270
Roseville, CA 95661

Job	Truss	Truss Type	Qty	Ply	ESPINOZA R60548620
J19-319	B05	Roof Special	1	1	Job Reference (optional)

Stockton Truss, STOCKTON, CA 95215 8.330 s Dec 5 2019 MiTek Industries, Inc. Tue Dec 10 11:42:56 2019 Page 1
ID:eURouH3h5RzkGDllLuCRE8yWpf_-YmzGf74Hi9xFm_koFRDN66??nvy7hBSHHmWr4cyANbT

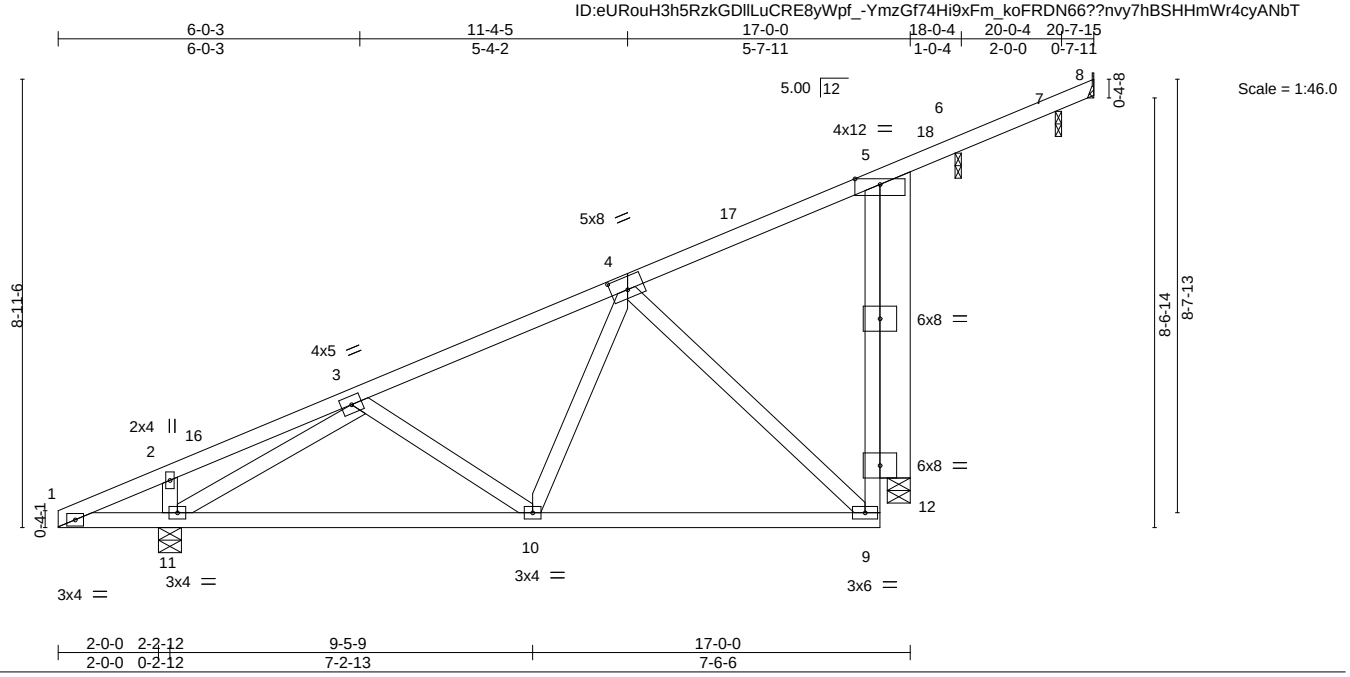

Plate Offsets (X,Y)-- [4:0-4-0,0-3-0]

LOADING (psf)		SPACING-	2-0-0	CSI.		DEFL.	in	(loc)	l/defl	L/d	PLATES	GRIP
TCLL	30.0	Plate Grip DOL	1.15	TC	0.33	Vert(LL)	-0.04	9-10	>999	240	MT20	220/195
(Roof Snow=30.0)		Lumber DOL	1.15	BC	0.28	Vert(CT)	-0.12	9-10	>999	180		
TCDL	14.0	Rep Stress Incr	YES	WB	0.59	Horz(CT)	-0.01	8	n/a	n/a		
BCLL	0.0 *	Code	IBC2015/TPI2014	Matrix-MSH		Wind(LL)	0.06	10-11	>999	360	Weight: 108 lb	FT = 20%
BCDL	10.0											

LUMBER-
TOP CHORD 2x4 DF No.1&Btr G
BOT CHORD 2x4 DF No.1&Btr G
WEBS 2x4 DF Std G
OTHERS 2x8 DF SS

BRACING-
TOP CHORD Structural wood sheathing directly applied or 6-0-0 oc purlins.
BOT CHORD Rigid ceiling directly applied or 6-0-0 oc bracing.

REACTIONS. All bearings 0-5-8 except (jt=length) 8=Mechanical, 6=0-1-8, 7=0-1-8.
(lb) - Max Horz 11=288(LC 11)
Max Uplift All uplift 100 lb or less at joint(s) 8, 11, 6, 7 except 12=-195(LC 11)
Max Grav All reactions 250 lb or less at joint(s) 8, 6, 7 except 11=1016(LC 21), 12=1050(LC 21)

FORCES. (lb) - Max. Comp./Max. Ten. - All forces 250 (lb) or less except when shown.
TOP CHORD 3-4=-770/115, 4-5=-320/112
BOT CHORD 9-12=-402/569, 5-12=-480/193, 10-11=-688/787, 9-10=-476/530
WEBS 4-10=-376/338, 4-9=-728/407, 3-11=-1064/90, 2-11=-267/57

NOTES-
1) Wind: ASCE 7-10; Vult=110mph (3-second gust) Vasd=87mph; TCDL=7.2psf; BCDL=4.2psf; h=25ft; Cat. II; Exp C; Enclosed; MWFRS (envelope) and C-C Exterior(2) 0-0-0 to 3-0-0, Interior(1) 3-0-0 to 20-7-3 zone; cantilever left and right exposed ; porch left and right exposed;C-C for members and forces & MWFRS for reactions shown; Lumber DOL=1.33 plate grip DOL=1.33
2) TCLL: ASCE 7-10; Pf=30.0 psf (flat roof snow); Category II; Exp C; Partially Exp.; Ct=1.00
3) Unbalanced snow loads have been considered for this design.
4) This truss has been designed for a 10.0 psf bottom chord live load nonconcurrent with any other live loads.
5) * This truss has been designed for a live load of 20.0psf on the bottom chord in all areas where a rectangle 3-6-0 tall by 2-0-0 wide will fit between the bottom chord and any other members.
6) A plate rating reduction of 20% has been applied for the green lumber members.
7) Refer to girder(s) for truss to truss connections.
8) Bearing at joint(s) 12 considers parallel to grain value using ANSI/TPI 1 angle to grain formula. Building designer should verify capacity of bearing surface.
9) Provide mechanical connection (by others) of truss to bearing plate at joint(s) 6, 7.
10) Provide mechanical connection (by others) of truss to bearing plate capable of withstanding 100 lb uplift at joint(s) 8, 11, 6, 7 except (jt=lb) 12=195.
11) Beveled plate or shim required to provide full bearing surface with truss chord at joint(s) 6, 7.
12) This truss is designed for a creep factor of 3.01, which is used to calculate the Vert(CT) deflection per ANSI/TPI 1.

December 11,2019

WARNING - Verify design parameters and READ NOTES ON THIS AND INCLUDED MITEK REFERENCE PAGE MII-7473 rev. 10/03/2015 BEFORE USE.
Design valid for use only with MiTek® connectors. This design is based only upon parameters shown, and is for an individual building component, not a truss system. Before use, the building designer must verify the applicability of design parameters and properly incorporate this design into the overall building design. Bracing indicated is to prevent buckling of individual truss web and/or chord members only. Additional temporary and permanent bracing is always required for stability and to prevent collapse with possible personal injury and property damage. For general guidance regarding the fabrication, storage, delivery, erection and bracing of trusses and truss systems, see ***ANSI/TPI1 Quality Criteria, DSB-89 and BCSI Building Component Safety Information*** available from Truss Plate Institute, 218 N. Lee Street, Suite 312, Alexandria, VA 22314.

MiTek USA, Inc.
400 Sunrise Avenue, Suite 270
Roseville, CA 95661

Job	Truss	Truss Type	Qty	Ply	ESPINOZA R60548621
J19-319	B06	Roof Special	1	1	Job Reference (optional)

Stockton Truss, STOCKTON, CA 95215 8.330 s Dec 5 2019 MiTek Industries, Inc. Tue Dec 10 11:42:57 2019 Page 1
ID:eURouH3h5RzkGDllLuCRE8yWpf_-0yXetS4vTS35O8J_p8kceKX1PJDcQcYRWQGOc2yANbS

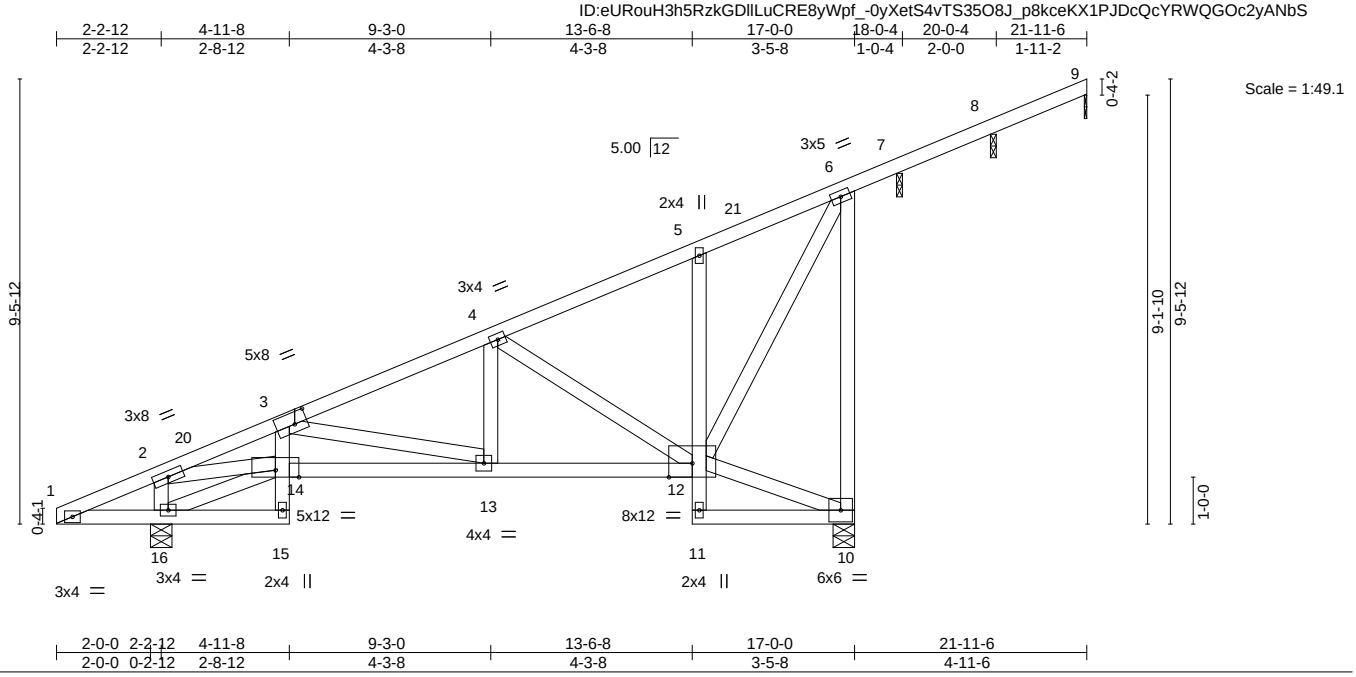

Plate Offsets (X,Y)-- [3:0-3-4,0-3-0]

LOADING (psf)		SPACING-	2-0-0	CSI.		DEFL.	in	(loc)	l/defl	L/d	PLATES	GRIP
TCLL	30.0	Plate Grip DOL	1.15	TC	0.91	Vert(LL)	-0.05	13-14	>999	240	MT20	220/195
(Roof Snow=30.0)		Lumber DOL	1.15	BC	0.52	Vert(CT)	-0.14	13-14	>999	180		
TCDL	14.0	Rep Stress Incr	YES	WB	0.73	Horz(CT)	0.09	10	n/a	n/a		
BCLL	0.0 *	Code	IBC2015/TPI2014	Matrix-MSH		Wind(LL)	0.06	13-14	>999	360	Weight: 113 lb	FT = 20%
BCDL	10.0											

LUMBER-
TOP CHORD 2x4 DF No.1&Btr G
BOT CHORD 2x4 DF No.1&Btr G *Except*
3-15,5-11: 2x4 DF Std G
WEBS 2x4 DF Std G

BRACING-
TOP CHORD Structural wood sheathing directly applied or 5-0-15 oc purlins, except end verticals.
BOT CHORD Rigid ceiling directly applied or 5-9-12 oc bracing.

REACTIONS. All bearings 0-5-8 except (jt=length) 9=0-0-10, 7=0-1-8, 8=0-1-8.
(lb) - Max Horz 16=237(LC 14)
Max Uplift All uplift 100 lb or less at joint(s) 9, 16, 7, 8 except 10=-155(LC 11)
Max Grav All reactions 250 lb or less at joint(s) 9, 7 except 10=1015(LC 21), 16=1050(LC 21), 8=262(LC 21)

FORCES. (lb) - Max. Comp./Max. Ten. - All forces 250 (lb) or less except when shown.
TOP CHORD 2-3=-1702/1024, 3-4=-1178/501, 4-5=-545/144, 5-6=-519/179, 6-10=-973/425
BOT CHORD 3-14=-337/164, 13-14=-1301/1714, 12-13=-692/1028, 5-12=-350/62
WEBS 2-16=-840/453, 14-16=-297/0, 2-14=-966/1651, 3-13=-703/629, 4-13=-305/266, 4-12=-714/466, 6-12=-515/895

NOTES-
1) Wind: ASCE 7-10; Vult=110mph (3-second gust) Vasd=87mph; TCDL=7.2psf; BCDL=4.2psf; h=25ft; Cat. II; Exp C; Enclosed; MWFRS (envelope) and C-C Exterior(2) 0-0-0 to 3-0-0, Interior(1) 3-0-0 to 21-11-1 zone; cantilever left and right exposed ; porch left and right exposed;C-C for members and forces & MWFRS for reactions shown; Lumber DOL=1.33 plate grip DOL=1.33
2) TCLL: ASCE 7-10; Pf=30.0 psf (flat roof snow); Category II; Exp C; Partially Exp.; Ct=1.00
3) Unbalanced snow loads have been considered for this design.
4) This truss has been designed for a 10.0 psf bottom chord live load nonconcurrent with any other live loads.
5) * This truss has been designed for a live load of 20.0psf on the bottom chord in all areas where a rectangle 3-6-0 tall by 2-0-0 wide will fit between the bottom chord and any other members.
6) A plate rating reduction of 20% has been applied for the green lumber members.
7) Provide mechanical connection (by others) of truss to bearing plate at joint(s) 9, 7, 8.
8) Provide mechanical connection (by others) of truss to bearing plate capable of withstanding 100 lb uplift at joint(s) 9, 16, 7, 8 except (jt=lb) 10=155.
9) Beveled plate or shim required to provide full bearing surface with truss chord at joint(s) 9, 7, 8.
10) This truss is designed for a creep factor of 3.01, which is used to calculate the Vert(CT) deflection per ANSI/TPI 1.

REGISTERED PROFESSIONAL ENGINEER
EDUARD TEODOSESCU
C 75435
EXP. 03/31/2020
STATE OF CALIFORNIA

December 11,2019

WARNING - Verify design parameters and READ NOTES ON THIS AND INCLUDED MITEK REFERENCE PAGE MII-7473 rev. 10/03/2015 BEFORE USE.
Design valid for use only with MiTek® connectors. This design is based only upon parameters shown, and is for an individual building component, not a truss system. Before use, the building designer must verify the applicability of design parameters and properly incorporate this design into the overall building design. Bracing indicated is to prevent buckling of individual truss web and/or chord members only. Additional temporary and permanent bracing is always required for stability and to prevent collapse with possible personal injury and property damage. For general guidance regarding the fabrication, storage, delivery, erection and bracing of trusses and truss systems, see ***ANSI/TPI1 Quality Criteria, DSB-89 and BCSI Building Component Safety Information*** available from Truss Plate Institute, 218 N. Lee Street, Suite 312, Alexandria, VA 22314.

MiTek USA, Inc.
400 Sunrise Avenue, Suite 270
Roseville, CA 95661

Job	Truss	Truss Type	Qty	Ply	ESPINOZA R60548622
J19-319	B07	Hip	1	1	Job Reference (optional)

Stockton Truss , STOCKTON, CA 95215 — 8.320 s Nov 19 2019 MiTek Industries, Inc. Tue Dec 10 12:57:25 2019 Page 1

ID:eURouH3h5RzkGDllLuCRE8yWpf_-WhnfvStke4A_ij_UfUYanso4QlQ6Fc5sZjhp8lyAKl8

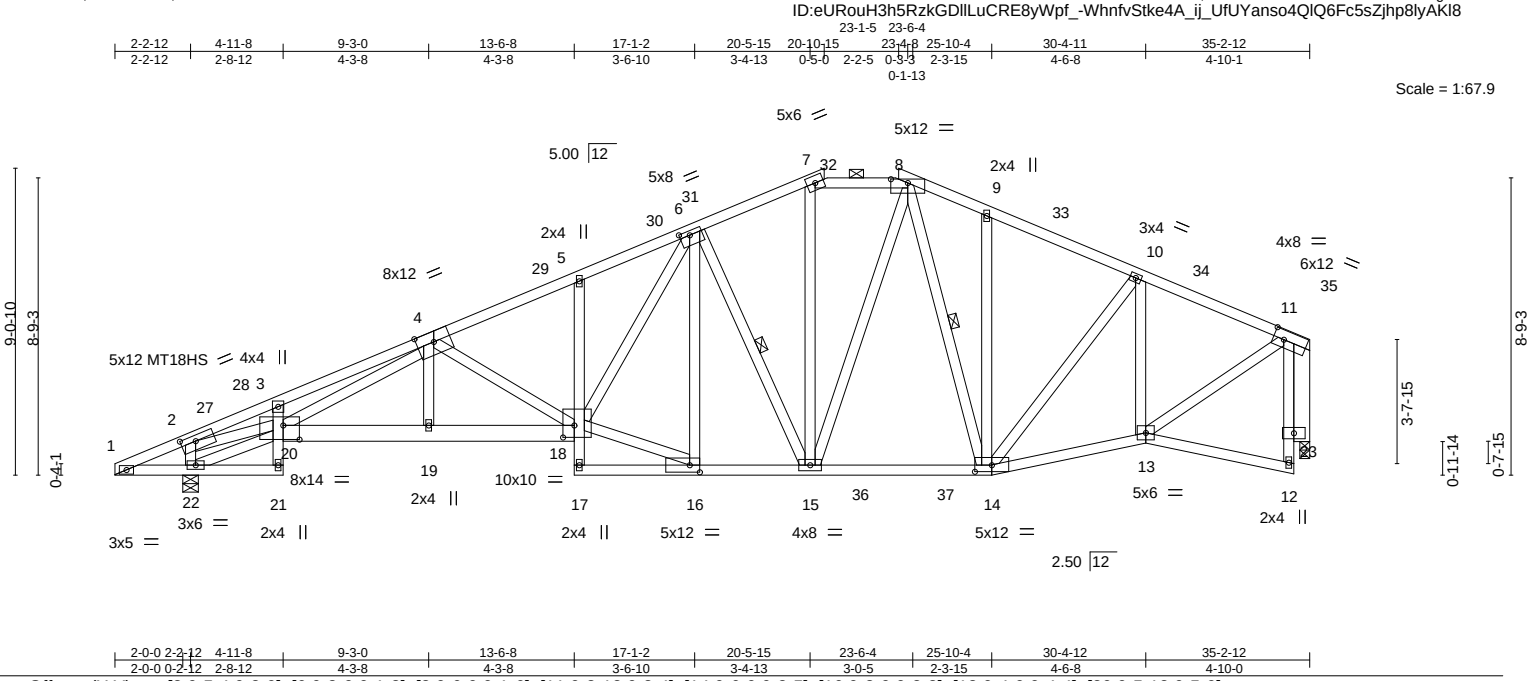

Plate Offsets (X,Y)-- [2:0-5-4,0-2-0], [6:0-3-9,0-1-8], [8:0-6-0,0-1-6], [11:0-3-12,0-3-4], [14:0-6-0,0-2-5], [16:0-3-9,0-2-8], [18:0-4-0,0-4-4], [20:0-5-12,0-5-0]

LOADING (psf)		SPACING-	2-0-0	CSI.		DEFL.	in	(loc)	l/defl	L/d	PLATES	GRIP
TCLL	30.0	Plate Grip DOL	1.15	TC	0.68	Vert(LL)	-0.27	5	>999	240	MT20	220/195
(Roof Snow=30.0)		Lumber DOL	1.15	BC	0.86	Vert(CT)	-0.52	5	>743	180	MT18HS	220/195
TCDL	14.0	Rep Stress Incr	YES	WB	0.98	Horz(CT)	0.27	23	n/a	n/a		
BCLL	0.0 *	Code	IBC2015/TPI2014	Matrix-MSH		Wind(LL)	0.16	18-19	>999	360	Weight: 256 lb	FT = 20%
BCDL	10.0											

LUMBER-

TOP CHORD 2x4 DF No.1&Btr G
BOT CHORD 2x4 DF No.1&Btr G *Except*
18-20: 2x6 DF SS G, 5-17: 2x4 DF Std G
WEBS 2x4 DF Std G *Except*
2-20,16-18,11-13: 2x4 DF No.1&Btr G
OTHERS 2x6 DF SS G

BRACING-

TOP CHORD Structural wood sheathing directly applied or 2-2-0 oc purlins, except 2-0-0 oc purlins (4-5-15 max.): 7-8.
BOT CHORD Rigid ceiling directly applied or 5-6-7 oc bracing.
WEBS 1 Row at midpt 8-14, 6-15

MiTek recommends that Stabilizers and required cross bracing be installed during truss erection, in accordance with Stabilizer Installation guide.

REACTIONS. (lb/size) 22=2009/0-5-8 (min. 0-2-13), 23=1757/0-3-8 (min. 0-1-8)
Max Horz 22=294(LC 11)
Max Uplift 22=-257(LC 10), 23=-262(LC 11)
Max Grav 22=2625(LC 33), 23=2421(LC 33)

FORCES. (lb) - Max. Comp./Max. Ten. - All forces 250 (lb) or less except when shown.
TOP CHORD 2-27=-5578/2288, 27-28=-5505/2298, 3-28=-5495/2301, 3-4=-5881/2413, 4-29=-4273/1428, 5-29=-4088/1449, 5-30=-4202/1467, 30-31=-4037/1477, 6-31=-4019/1479, 6-7=-2489/882, 7-32=-2211/835, 8-32=-2206/837, 8-9=-2280/844, 9-33=-2164/797, 10-33=-2310/774, 10-34=-1952/746, 34-35=-2057/733, 11-35=-2159/726
BOT CHORD 21-22=-318/545, 3-20=-371/55, 19-20=-2298/4834, 18-19=-2286/4821, 5-18=-458/57, 15-16=-1315/2710, 15-36=-1074/1994, 36-37=-1074/1994, 14-37=-1074/1994, 13-14=-1109/1975, 11-23=-2382/939
WEBS 2-22=-2199/887, 20-22=-804/0, 2-20=-2164/5268, 4-20=-621/618, 4-19=-222/275, 4-18=-1194/503, 16-18=-1317/2604, 6-18=-915/2230, 7-15=-238/496, 8-15=-256/697, 8-14=-192/264, 9-14=-520/116, 10-14=-12/255, 10-13=-833/82, 11-13=-1044/2284, 6-16=-738/319, 6-15=-1179/381

NOTES-

1) Wind: ASCE 7-10; Vult=110mph (3-second gust) Vasd=87mph; TCDL=7.2psf; BCDL=4.2psf; h=25ft; Cat. II; Exp C; Enclosed; MWFRS (envelope) and C-C Exterior(2) 0-0-0 to 3-0-0, Interior(1) 3-0-0 to 20-5-15, Exterior(2) 20-5-15 to 27-5-11, Interior(1) 27-5-11 to 34-7-5 zone; cantilever left and right exposed ; porch left and right exposed;C-C for members and forces & MWFRS for reactions shown; Lumber DOL=1.33 plate grip DOL=1.33
2) TCLL: ASCE 7-10; Pf=30.0 psf (flat roof snow); Category II; Exp C; Partially Exp.; Ct=1.00
3) Unbalanced snow loads have been considered for this design.
4) Provide adequate drainage to prevent water ponding.
5) All plates are MT20 plates unless otherwise indicated.
6) This truss has been designed for a 10.0 psf bottom chord live load nonconcurrent with any other live loads.
7) * This truss has been designed for a live load of 20.0psf on the bottom chord in all areas where a rectangle 3-6-0 tall by 2-0-0 wide will fit between the bottom chord and any other members, with BCDL = 10.0psf.
8) A plate rating reduction of 20% has been applied for the green lumber members.
9) Bearing at joint(s) 23 considers parallel to grain value using ANSI/TPI 1 angle to grain formula. Building designer should verify capacity of bearing surface.

December 11,2019

Continued on page 2

⚠ ***WARNING - Verify design parameters and READ NOTES ON THIS AND INCLUDED MITEK REFERENCE PAGE MII-7473 rev. 10/03/2015 BEFORE USE.***
Design valid for use only with MiTek® connectors. This design is based only upon parameters shown, and is for an individual building component, not a truss system. Before use, the building designer must verify the applicability of design parameters and properly incorporate this design into the overall building design. Bracing indicated is to prevent buckling of individual truss web and/or chord members only. Additional temporary and permanent bracing is always required for stability and to prevent collapse with possible personal injury and property damage. For general guidance regarding the fabrication, storage, delivery, erection and bracing of trusses and truss systems, see ***ANSI/TPI1 Quality Criteria, DSB-89 and BCSI Building Component Safety Information*** available from Truss Plate Institute, 218 N. Lee Street, Suite 312, Alexandria, VA 22314.

MiTek USA, Inc.
400 Sunrise Avenue, Suite 270
Roseville, CA 95661

NOTES-

10) Provide mechanical connection (by others) of truss to bearing plate capable of withstanding 257 lb uplift at joint 22 and 262 lb uplift at joint 23.
11) Graphical purlin representation does not depict the size or the orientation of the purlin along the top and/or bottom chord.
12) Hanger(s) or other connection device(s) shall be provided sufficient to support concentrated load(s) 150 lb down and 82 lb up at 21-0-12, and 144 lb down and 99 lb up at 23-2-12 on top chord. The design/selection of such connection device(s) is the responsibility of others.
13) This truss is designed for a creep factor of 3.01, which is used to calculate the Vert(CT) deflection per ANSI/TPI 1.

LOAD CASE(S) Standard

1) Dead + Snow (balanced): Lumber Increase=1.15, Plate Increase=1.15
   Uniform Loads (plf)
   Vert: 1-7=-88, 7-8=-88, 8-11=-88, 21-24=-20, 18-20=-20, 14-17=-20, 13-14=-20, 12-13=-20
   Concentrated Loads (lb)
   Vert: 32=-28

WARNING - Verify design parameters and READ NOTES ON THIS AND INCLUDED MITEK REFERENCE PAGE MII-7473 rev. 10/03/2015 BEFORE USE.
Design valid for use only with MiTek® connectors. This design is based only upon parameters shown, and is for an individual building component, not a truss system. Before use, the building designer must verify the applicability of design parameters and properly incorporate this design into the overall building design. Bracing indicated is to prevent buckling of individual truss web and/or chord members only. Additional temporary and permanent bracing is always required for stability and to prevent collapse with possible personal injury and property damage. For general guidance regarding the fabrication, storage, delivery, erection and bracing of trusses and truss systems, see ***ANSI/TPI1 Quality Criteria, DSB-89 and BCSI Building Component Safety Information*** available from Truss Plate Institute, 218 N. Lee Street, Suite 312, Alexandria, VA 22314.

MiTek USA, Inc.
400 Sunrise Avenue, Suite 270
Roseville, CA 95661

Job	Truss	Truss Type	Qty	Ply	ESPINOZA R60548623
J19-319	B08	Hip	1	1	Job Reference (optional)

Stockton Truss, STOCKTON, CA 95215 8.330 s Dec 5 2019 MiTek Industries, Inc. Tue Dec 10 11:43:02 2019 Page 1

ID:eURouH3h5RzkGDllLuCRE8yWpf_-MwKXwA82I?hOUvByciKnLNFySKrD5oxAghz9HGyANbN

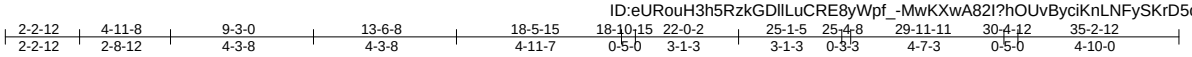

Scale = 1:69.2

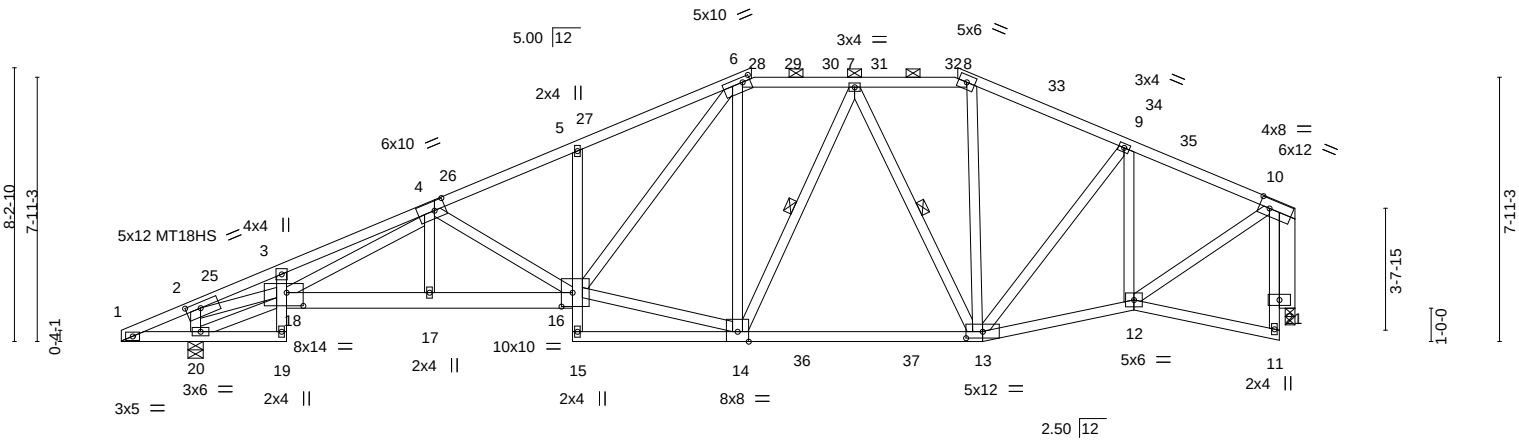

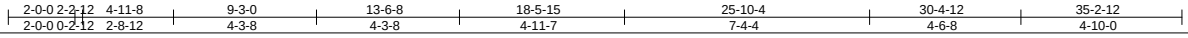

Plate Offsets (X,Y)-- [2:0-5-4,0-2-0], [4:0-4-0,0-3-4], [6:0-2-12,0-1-12], [10:0-3-12,0-3-4], [13:0-6-0,0-2-5], [16:0-4-0,0-5-0], [18:0-6-0,0-4-12]

LOADING (psf)		SPACING-	2-0-0	CSI.		DEFL.	in	(loc)	l/defl	L/d	PLATES	GRIP
TCLL	30.0	Plate Grip DOL	1.15	TC	0.70	Vert(LL)	-0.26	5	>999	240	MT20	220/195
(Roof Snow=30.0)		Lumber DOL	1.15	BC	0.94	Vert(CT)	-0.53	5	>732	180	MT18HS	220/195
TCDL	14.0	Rep Stress Incr	YES	WB	0.98	Horz(CT)	0.27	21	n/a	n/a		
BCLL	0.0 *	Code	IBC2015/TPI2014	Matrix-MSH		Wind(LL)	0.18	13-14	>999	360	Weight: 237 lb	FT = 20%
BCDL	10.0											

LUMBER-

TOP CHORD 2x4 DF No.1&Btr G
BOT CHORD 2x4 DF No.1&Btr G *Except*
16-18: 2x6 DF SS G, 5-15: 2x4 DF Std G
WEBS 2x4 DF Std G *Except*
2-18: 2x4 DF No.1&Btr G
OTHERS 2x6 DF SS G

BRACING-

TOP CHORD Structural wood sheathing directly applied or 2-2-0 oc purlins, except 2-0-0 oc purlins (4-3-4 max.): 6-8.
BOT CHORD Rigid ceiling directly applied or 2-2-0 oc bracing.
WEBS 1 Row at midpt 7-14, 7-13

REACTIONS. (lb/size) 20=2061/0-5-8, 21=1887/0-3-8
Max Horz 20=293(LC 11)
Max Uplift 20=-294(LC 10), 21=-339(LC 11)
Max Grav 20=2649(LC 33), 21=2346(LC 33)

FORCES. (lb) - Max. Comp./Max. Ten. - All forces 250 (lb) or less except when shown.
TOP CHORD 2-3=-5518/2371, 3-4=-5773/2489, 4-5=-4080/1522, 5-6=-4087/1586, 6-7=-2354/964, 7-8=-1912/805, 8-9=-2217/862, 9-10=-2090/793
BOT CHORD 19-20=-326/540, 3-18=-421/55, 17-18=-2366/4658, 16-17=-2354/4644, 5-16=-636/113, 13-14=-1261/2210, 12-13=-1158/1909, 10-21=-2307/988
WEBS 2-20=-2236/906, 18-20=-789/0, 2-18=-2229/5184, 4-18=-621/704, 4-17=-231/282, 4-16=-1182/499, 14-16=-1257/2162, 6-16=-898/2198, 6-14=-646/194, 7-14=-113/401, 8-13=-227/377, 9-13=-48/327, 10-12=-1106/2208, 9-12=-808/113, 7-13=-735/262

NOTES-

1) Wind: ASCE 7-10; Vult=110mph (3-second gust) Vasd=87mph; TCDL=7.2psf; BCDL=4.2psf; h=25ft; Cat. II; Exp C; Enclosed; MWFRS (envelope) and C-C Exterior(2) 0-0-0 to 3-0-0, Interior(1) 3-0-0 to 18-5-15, Exterior(2) 18-5-15 to 22-8-14, Interior(1) 22-8-14 to 25-6-4, Exterior(2) 25-6-4 to 29-9-2, Interior(1) 29-9-2 to 34-7-5 zone; cantilever left and right exposed ; porch left and right exposed;C-C for members and forces & MWFRS for reactions shown; Lumber DOL=1.33 plate grip DOL=1.33
2) TCLL: ASCE 7-10; Pf=30.0 psf (flat roof snow); Category II; Exp C; Partially Exp.; Ct=1.00
3) Unbalanced snow loads have been considered for this design.
4) Provide adequate drainage to prevent water ponding.
5) All plates are MT20 plates unless otherwise indicated.
6) This truss has been designed for a 10.0 psf bottom chord live load nonconcurrent with any other live loads.
7) * This truss has been designed for a live load of 20.0psf on the bottom chord in all areas where a rectangle 3-6-0 tall by 2-0-0 wide will fit between the bottom chord and any other members, with BCDL = 10.0psf.
8) A plate rating reduction of 20% has been applied for the green lumber members.
9) Bearing at joint(s) 21 considers parallel to grain value using ANSI/TPI 1 angle to grain formula. Building designer should verify capacity of bearing surface.
10) Provide mechanical connection (by others) of truss to bearing plate capable of withstanding 100 lb uplift at joint(s) except (jt=lb) 20=294, 21=339.
11) Graphical purlin representation does not depict the size or the orientation of the purlin along the top and/or bottom chord.

December 11,2019

Continued on page 2

WARNING - Verify design parameters and READ NOTES ON THIS AND INCLUDED MITEK REFERENCE PAGE MII-7473 rev. 10/03/2015 BEFORE USE.
Design valid for use only with MiTek® connectors. This design is based only upon parameters shown, and is for an individual building component, not a truss system. Before use, the building designer must verify the applicability of design parameters and properly incorporate this design into the overall building design. Bracing indicated is to prevent buckling of individual truss web and/or chord members only. Additional temporary and permanent bracing is always required for stability and to prevent collapse with possible personal injury and property damage. For general guidance regarding the fabrication, storage, delivery, erection and bracing of trusses and truss systems, see ***ANSI/TPI1 Quality Criteria, DSB-89 and BCSI Building Component Safety Information*** available from Truss Plate Institute, 218 N. Lee Street, Suite 312, Alexandria, VA 22314.

MiTek USA, Inc.
400 Sunrise Avenue, Suite 270
Roseville, CA 95661

NOTES-

12) Hanger(s) or other connection device(s) shall be provided sufficient to support concentrated load(s) 175 lb down and 111 lb up at 19-0-12, and 375 lb down and 215 lb up at 24-11-8 on top chord. The design/selection of such connection device(s) is the responsibility of others.
13) This truss is designed for a creep factor of 3.01, which is used to calculate the Vert(CT) deflection per ANSI/TPI 1.

LOAD CASE(S) Standard

1) Dead + Snow (balanced): Lumber Increase=1.15, Plate Increase=1.15
   Uniform Loads (plf)
   Vert: 1-6=-88, 6-8=-88, 8-10=-88, 19-22=-20, 16-18=-20, 13-15=-20, 12-13=-20, 11-12=-20
   Concentrated Loads (lb)
   Vert: 28=-5 32=-206

WARNING - Verify design parameters and READ NOTES ON THIS AND INCLUDED MITEK REFERENCE PAGE MII-7473 rev. 10/03/2015 BEFORE USE.
Design valid for use only with MiTek® connectors. This design is based only upon parameters shown, and is for an individual building component, not a truss system. Before use, the building designer must verify the applicability of design parameters and properly incorporate this design into the overall building design. Bracing indicated is to prevent buckling of individual truss web and/or chord members only. Additional temporary and permanent bracing is always required for stability and to prevent collapse with possible personal injury and property damage. For general guidance regarding the fabrication, storage, delivery, erection and bracing of trusses and truss systems, see ***ANSI/TPI1 Quality Criteria, DSB-89 and BCSI Building Component Safety Information*** available from Truss Plate Institute, 218 N. Lee Street, Suite 312, Alexandria, VA 22314.

MiTek USA, Inc.
400 Sunrise Avenue, Suite 270
Roseville, CA 95661

Job	Truss	Truss Type	Qty	Ply	ESPINOZA R60548624
J19-319	C01	Roof Special	2	1	Job Reference (optional)

Stockton Truss, STOCKTON, CA 95215 8.330 s Dec 5 2019 MiTek Industries, Inc. Tue Dec 10 11:43:03 2019 Page 1
ID:eURouH3h5RzkGDlILuCRE8yWpf_-q6uv7W9g3IpF63m8APr0uan6pkLaqJtJuLjjqiyANbM

6-8-8	12-8-15	18-9-6	25-10-4	30-4-11	35-2-12
6-8-8	6-0-7	6-0-7	7-0-14	4-6-8	4-10-1

Scale = 1:59.7

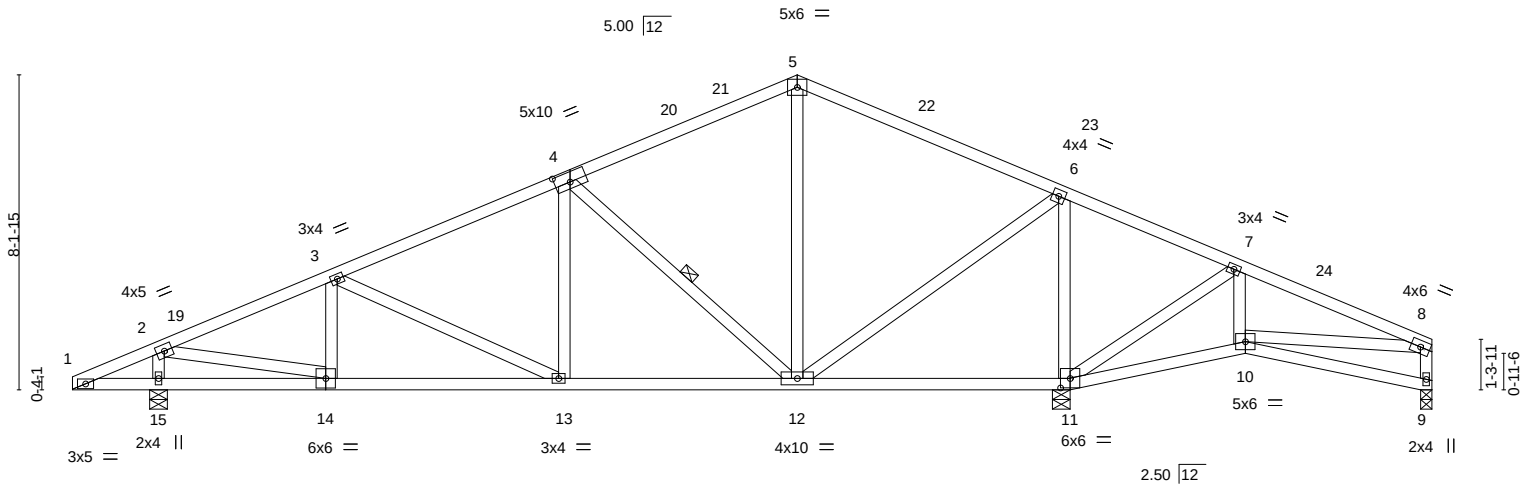

2-0-0	6-8-8	12-8-15	18-9-6	25-7-8	25-10-4	30-4-12	35-2-12
2-0-0	4-8-8	6-0-7	6-0-7	6-10-2	0-2-12	4-6-8	4-10-0

Plate Offsets (X,Y)-- [4:0-4-12,0-3-0], [11:0-3-0,0-2-15]

LOADING (psf)		SPACING-	2-0-0	CSI.		DEFL.	in	(loc)	l/defl	L/d	PLATES	GRIP
TCLL	30.0	Plate Grip DOL	1.15	TC	0.73	Vert(LL)	-0.06	13-14	>999	240	MT20	220/195
(Roof Snow=30.0)		Lumber DOL	1.15	BC	0.29	Vert(CT)	-0.18	13-14	>999	180		
TCDL	14.0	Rep Stress Incr	YES	WB	0.74	Horz(CT)	0.03	9	n/a	n/a		
BCLL	0.0 *	Code	IBC2015/TPI2014	Matrix-MSH		Wind(LL)	0.07	11-12	>999	360	Weight: 184 lb	FT = 20%
BCDL	10.0											

LUMBER-
TOP CHORD 2x4 DF No.1&Btr G
BOT CHORD 2x4 DF No.1&Btr G
WEBS 2x4 DF Std G

BRACING-
TOP CHORD Structural wood sheathing directly applied or 4-4-5 oc purlins, except end verticals.
BOT CHORD Rigid ceiling directly applied or 6-0-0 oc bracing.
WEBS 1 Row at midpt 4-12

REACTIONS. (lb/size) 11=2125/0-5-8, 9=238/0-3-8, 15=1426/0-5-8
Max Horz 15=92(LC 14)
Max Uplift 11=-288(LC 11), 9=-25(LC 10), 15=-182(LC 10)
Max Grav 11=2125(LC 1), 9=289(LC 21), 15=1487(LC 20)

FORCES. (lb) - Max. Comp./Max. Ten. - All forces 250 (lb) or less except when shown.
TOP CHORD 2-3=-1754/624, 3-4=-1566/553, 4-5=-869/347, 5-6=-789/343, 6-7=-240/547, 8-9=-262/93
BOT CHORD 13-14=-536/1566, 12-13=-396/1355, 11-12=-368/290
WEBS 3-14=-269/46, 3-13=-281/148, 4-13=-221/315, 4-12=-946/369, 6-12=-510/1227, 6-11=-1704/606, 7-11=-535/404, 7-10=-278/188, 2-14=-582/1660, 2-15=-1375/467

NOTES-
1) Wind: ASCE 7-10; Vult=110mph (3-second gust) Vasd=87mph; TCDL=7.2psf; BCDL=4.2psf; h=25ft; Cat. II; Exp C; Enclosed; MWFRS (envelope) and C-C Exterior(2) 0-0-0 to 3-0-0, Interior(1) 3-0-0 to 18-9-6, Exterior(2) 18-9-6 to 21-9-6, Interior(1) 21-9-6 to 35-0-15 zone; cantilever left and right exposed ; porch left and right exposed;C-C for members and forces & MWFRS for reactions shown; Lumber DOL=1.33 plate grip DOL=1.33
2) TCLL: ASCE 7-10; Pf=30.0 psf (flat roof snow); Category II; Exp C; Partially Exp.; Ct=1.00
3) Unbalanced snow loads have been considered for this design.
4) This truss has been designed for a 10.0 psf bottom chord live load nonconcurrent with any other live loads.
5) * This truss has been designed for a live load of 20.0psf on the bottom chord in all areas where a rectangle 3-6-0 tall by 2-0-0 wide will fit between the bottom chord and any other members.
6) A plate rating reduction of 20% has been applied for the green lumber members.
7) Bearing at joint(s) 9 considers parallel to grain value using ANSI/TPI 1 angle to grain formula. Building designer should verify capacity of bearing surface.
8) Provide mechanical connection (by others) of truss to bearing plate capable of withstanding 100 lb uplift at joint(s) 9 except (jt=lb) 11=288, 15=182.
9) Hanger(s) or other connection device(s) shall be provided sufficient to support concentrated load(s) 53 lb down and 42 lb up at 17-1-8 on top chord. The design/selection of such connection device(s) is the responsibility of others.
10) This truss is designed for a creep factor of 3.01, which is used to calculate the Vert(CT) deflection per ANSI/TPI 1.
11) In the LOAD CASE(S) section, loads applied to the face of the truss are noted as front (F) or back (B).

LOAD CASE(S) Standard
1) Dead + Snow (balanced): Lumber Increase=1.15, Plate Increase=1.15

December 11,2019

Continued on page 2

WARNING - Verify design parameters and READ NOTES ON THIS AND INCLUDED MITEK REFERENCE PAGE MII-7473 rev. 10/03/2015 BEFORE USE.
Design valid for use only with MiTek® connectors. This design is based only upon parameters shown, and is for an individual building component, not a truss system. Before use, the building designer must verify the applicability of design parameters and properly incorporate this design into the overall building design. Bracing indicated is to prevent buckling of individual truss web and/or chord members only. Additional temporary and permanent bracing is always required for stability and to prevent collapse with possible personal injury and property damage. For general guidance regarding the fabrication, storage, delivery, erection and bracing of trusses and truss systems, see ***ANSI/TPI1 Quality Criteria, DSB-89 and BCSI Building Component Safety Information*** available from Truss Plate Institute, 218 N. Lee Street, Suite 312, Alexandria, VA 22314.

MiTek USA, Inc.
400 Sunrise Avenue, Suite 270
Roseville, CA 95661

LOAD CASE(S) Standard

Uniform Loads (plf)

Vert: 1-5=-88, 5-8=-88, 11-16=-20, 10-11=-20, 9-10=-20

WARNING - Verify design parameters and READ NOTES ON THIS AND INCLUDED MITEK REFERENCE PAGE MII-7473 rev. 10/03/2015 BEFORE USE.

Design valid for use only with MiTek® connectors. This design is based only upon parameters shown, and is for an individual building component, not a truss system. Before use, the building designer must verify the applicability of design parameters and properly incorporate this design into the overall building design. Bracing indicated is to prevent buckling of individual truss web and/or chord members only. Additional temporary and permanent bracing is always required for stability and to prevent collapse with possible personal injury and property damage. For general guidance regarding the fabrication, storage, delivery, erection and bracing of trusses and truss systems, see ***ANSI/TPI1 Quality Criteria, DSB-89 and BCSI Building Component Safety Information*** available from Truss Plate Institute, 218 N. Lee Street, Suite 312, Alexandria, VA 22314.

MiTek USA, Inc.
400 Sunrise Avenue, Suite 270
Roseville, CA 95661

Job	Truss	Truss Type	Qty	Ply	ESPINOZA R60548625
J19-319	C02	California	1	1	Job Reference (optional)

Stockton Truss, STOCKTON, CA 95215 8.330 s Dec 5 2019 MiTek Industries, Inc. Tue Dec 10 11:43:05 2019 Page 1

ID:eURouH3h5RzkGDllLuCRE8yWpf_-nV?gYCBwbw3zLMwXHqtUz?tU?X_2IBNcMfCpubyANbK

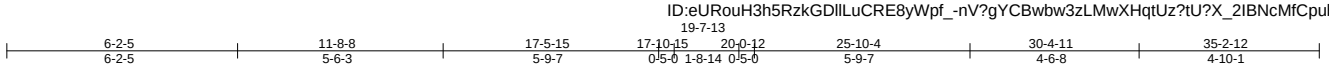

Scale = 1:61.8

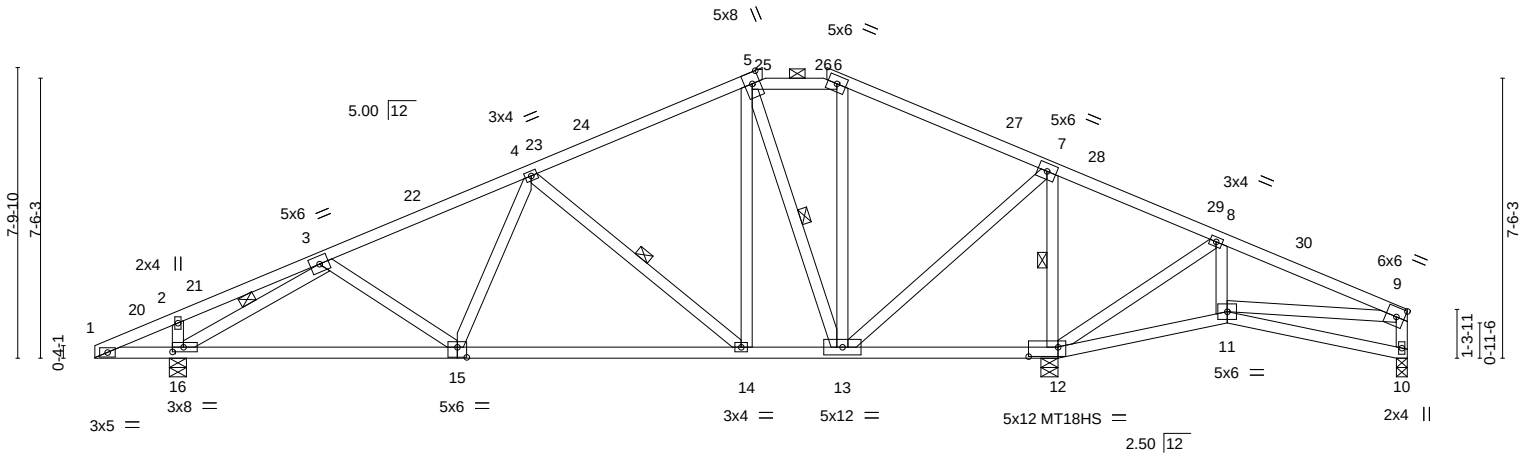

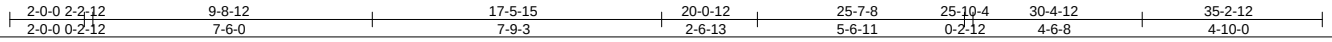

Plate Offsets (X,Y)-- [12:0-9-8,0-3-0], [15:0-3-0,0-3-4], [16:0-3-9,0-1-8]

LOADING (psf)		SPACING-	2-0-0	CSI.		DEFL.	in	(loc)	l/defl	L/d	PLATES	GRIP
TCLL	30.0	Plate Grip DOL	1.15	TC	0.62	Vert(LL)	-0.10	14-15	>999	240	MT20	220/195
(Roof Snow=30.0)		Lumber DOL	1.15	BC	0.42	Vert(CT)	-0.29	14-15	>989	180	MT18HS	220/195
TCDL	14.0	Rep Stress Incr	YES	WB	0.87	Horz(CT)	0.06	10	n/a	n/a		
BCLL	0.0 *	Code	IBC2015/TPI2014	Matrix-MSH		Wind(LL)	0.10	14-15	>999	360	Weight: 196 lb	FT = 20%
BCDL	10.0											

LUMBER-

TOP CHORD 2x4 DF No.1&Btr G
BOT CHORD 2x4 DF No.1&Btr G
WEBS 2x4 DF Std G

BRACING-

TOP CHORD Structural wood sheathing directly applied or 3-10-1 oc purlins, except end verticals, and 2-0-0 oc purlins (6-0-0 max.): 5-6.
BOT CHORD Rigid ceiling directly applied or 6-0-0 oc bracing.
WEBS 1 Row at midpt 4-14, 5-13, 7-12, 3-16

REACTIONS. (lb/size) 12=2456/0-5-8, 10=215/0-3-8, 16=1544/0-5-8
Max Horz 16=86(LC 14)
Max Uplift 12=-336(LC 11), 10=-26(LC 10), 16=-202(LC 10)
Max Grav 12=3293(LC 32), 10=327(LC 32), 16=2065(LC 32)

FORCES. (lb) - Max. Comp./Max. Ten. - All forces 250 (lb) or less except when shown.
TOP CHORD 3-4=-2425/678, 4-5=-1485/422, 5-6=-889/316, 6-7=-1113/314, 7-8=-242/862, 9-10=-306/93
BOT CHORD 15-16=-512/2188, 14-15=-464/2036, 13-14=-217/1212, 12-13=-596/296
WEBS 4-15=-208/289, 4-14=-1059/314, 5-14=-349/798, 5-13=-1056/343, 6-13=-332/53, 7-13=-538/1962, 7-12=-2706/650, 8-12=-833/414, 8-11=-280/192, 3-16=-2619/569, 2-16=-462/82

NOTES-

1) Wind: ASCE 7-10; Vult=110mph (3-second gust) Vasd=87mph; TCDL=7.2psf; BCDL=4.2psf; h=25ft; Cat. II; Exp C; Enclosed; MWFRS (envelope) and C-C Exterior(2) 0-0-0 to 3-0-0, Interior(1) 3-0-0 to 17-7-12, Exterior(2) 17-7-12 to 24-3-11, Interior(1) 24-3-11 to 35-0-15 zone; cantilever left and right exposed ; porch left and right exposed;C-C for members and forces & MWFRS for reactions shown; Lumber DOL=1.33 plate grip DOL=1.33
2) TCLL: ASCE 7-10; Pf=30.0 psf (flat roof snow); Category II; Exp C; Partially Exp.; Ct=1.00
3) Unbalanced snow loads have been considered for this design.
4) Provide adequate drainage to prevent water ponding.
5) All plates are MT20 plates unless otherwise indicated.
6) This truss has been designed for a 10.0 psf bottom chord live load nonconcurrent with any other live loads.
7) * This truss has been designed for a live load of 20.0psf on the bottom chord in all areas where a rectangle 3-6-0 tall by 2-0-0 wide will fit between the bottom chord and any other members.
8) A plate rating reduction of 20% has been applied for the green lumber members.
9) Bearing at joint(s) 10 considers parallel to grain value using ANSI/TPI 1 angle to grain formula. Building designer should verify capacity of bearing surface.
10) Provide mechanical connection (by others) of truss to bearing plate capable of withstanding 100 lb uplift at joint(s) 10 except (jt=lb) 12=336, 16=202.
11) Graphical purlin representation does not depict the size or the orientation of the purlin along the top and/or bottom chord.
12) Hanger(s) or other connection device(s) shall be provided sufficient to support concentrated load(s) 263 lb down and 95 lb up at 17-11-10, and 283 lb down and 95 lb up at 19-7-1 on top chord. The design/selection of such connection device(s) is the responsibility of others.
13) This truss is designed for a creep factor of 3.01, which is used to calculate the Vert(CT) deflection per ANSI/TPI 1.

December 11,2019

LOAD CASE(S) Standard

Continued on page 2

WARNING - Verify design parameters and READ NOTES ON THIS AND INCLUDED MITEK REFERENCE PAGE MII-7473 rev. 10/03/2015 BEFORE USE.
Design valid for use only with MiTek® connectors. This design is based only upon parameters shown, and is for an individual building component, not a truss system. Before use, the building designer must verify the applicability of design parameters and properly incorporate this design into the overall building design. Bracing indicated is to prevent buckling of individual truss web and/or chord members only. Additional temporary and permanent bracing is always required for stability and to prevent collapse with possible personal injury and property damage. For general guidance regarding the fabrication, storage, delivery, erection and bracing of trusses and truss systems, see ***ANSI/TPI1 Quality Criteria, DSB-89 and BCSI Building Component Safety Information*** available from Truss Plate Institute, 218 N. Lee Street, Suite 312, Alexandria, VA 22314.

MiTek USA, Inc.
400 Sunrise Avenue, Suite 270
Roseville, CA 95661

LOAD CASE(S) Standard

1) Dead + Snow (balanced): Lumber Increase=1.15, Plate Increase=1.15
   Uniform Loads (plf)
   Vert: 1-5=-88, 5-6=-88, 6-9=-88, 12-17=-20, 11-12=-20, 10-11=-20
   Concentrated Loads (lb)
   Vert: 25=-204 26=-223

WARNING - Verify design parameters and READ NOTES ON THIS AND INCLUDED MITEK REFERENCE PAGE MII-7473 rev. 10/03/2015 BEFORE USE.
Design valid for use only with MiTek® connectors. This design is based only upon parameters shown, and is for an individual building component, not a truss system. Before use, the building designer must verify the applicability of design parameters and properly incorporate this design into the overall building design. Bracing indicated is to prevent buckling of individual truss web and/or chord members only. Additional temporary and permanent bracing is always required for stability and to prevent collapse with possible personal injury and property damage. For general guidance regarding the fabrication, storage, delivery, erection and bracing of trusses and truss systems, see ***ANSI/TPI1 Quality Criteria, DSB-89 and BCSI Building Component Safety Information*** available from Truss Plate Institute, 218 N. Lee Street, Suite 312, Alexandria, VA 22314.

MiTek USA, Inc.
400 Sunrise Avenue, Suite 270
Roseville, CA 95661

Job	Truss	Truss Type	Qty	Ply	ESPINOZA R60548626
J19-319	C03	California	1	1	Job Reference (optional)

Stockton Truss, STOCKTON, CA 95215 8.330 s Dec 5 2019 MiTek Industries, Inc. Tue Dec 10 11:43:07 2019 Page 1
ID:eURouH3h5RzkGDllLuCRE8yWpf_-jt7QztCA7XKhbg4vPFwy2QylhLhGm6lvpzhwzTyANbI

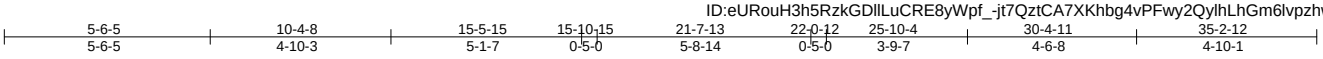

Scale = 1:61.8

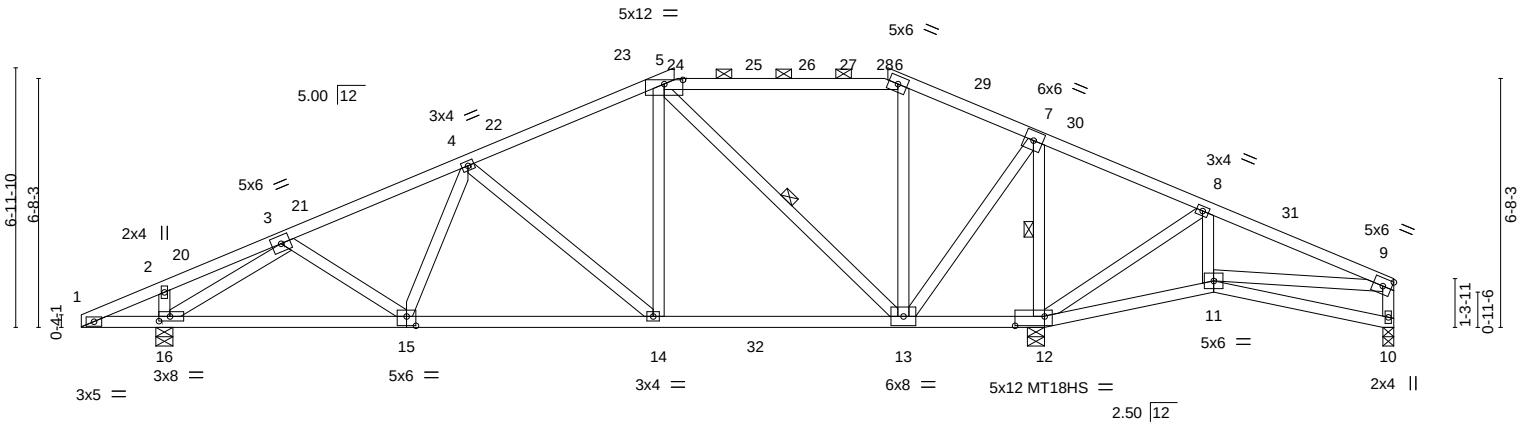

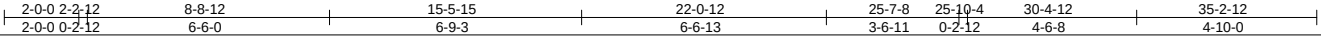

Plate Offsets (X,Y)-- [5:0-6-0,0-1-6], [12:0-9-8,0-3-0], [15:0-3-0,0-3-0], [16:0-3-9,0-1-8]

LOADING (psf)		SPACING-	2-0-0	CSI.		DEFL.	in	(loc)	l/defl	L/d	PLATES	GRIP
TCLL	30.0	Plate Grip DOL	1.15	TC	0.93	Vert(LL)	-0.09	14-15	>999	240	MT20	220/195
(Roof Snow=30.0)		Lumber DOL	1.15	BC	0.37	Vert(CT)	-0.21	14-15	>999	180	MT18HS	220/195
TCDL	14.0	Rep Stress Incr	YES	WB	0.81	Horz(CT)	0.06	10	n/a	n/a		
BCLL	0.0 *	Code	IBC2015/TPI2014	Matrix-MSH		Wind(LL)	0.06	14-15	>999	360	Weight: 189 lb	FT = 20%
BCDL	10.0											

LUMBER-
TOP CHORD 2x4 DF No.1&Btr G
BOT CHORD 2x4 DF No.1&Btr G
WEBS 2x4 DF Std G

BRACING-
TOP CHORD Structural wood sheathing directly applied or 4-2-5 oc purlins, except end verticals, and 2-0-0 oc purlins (2-2-0 max.): 5-6.
BOT CHORD Rigid ceiling directly applied or 6-0-0 oc bracing.
WEBS 1 Row at midpt 5-13, 7-12

REACTIONS. (lb/size) 12=2386/0-5-8, 10=215/0-3-8, 16=1512/0-5-8
Max Horz 16=78(LC 14)
Max Uplift 12=-353(LC 11), 10=-24(LC 10), 16=-207(LC 10)
Max Grav 12=3086(LC 32), 10=333(LC 32), 16=2057(LC 32)

FORCES. (lb) - Max. Comp./Max. Ten. - All forces 250 (lb) or less except when shown.
TOP CHORD 2-3=-12/251, 3-4=-2280/690, 4-5=-1603/513, 5-6=-541/212, 6-7=-592/207, 7-8=-258/872, 8-9=-252/245, 9-10=-311/88
BOT CHORD 15-16=-499/1918, 14-15=-517/1972, 13-14=-327/1353, 12-13=-630/311
WEBS 4-14=-792/239, 5-14=-338/658, 5-13=-1267/424, 6-13=-506/52, 7-13=-572/1835, 7-12=-2487/696, 8-12=-910/427, 8-11=-283/201, 3-16=-2544/585, 2-16=-418/79

NOTES-
1) Wind: ASCE 7-10; Vult=110mph (3-second gust) Vasd=87mph; TCDL=7.2psf; BCDL=4.2psf; h=25ft; Cat. II; Exp C; Enclosed; MWFRS (envelope) and C-C Exterior(2) 0-0-0 to 3-0-0, Interior(1) 3-0-0 to 15-7-12, Exterior(2) 15-7-12 to 19-10-10, Interior(1) 19-10-10 to 22-0-12, Exterior(2) 22-0-12 to 26-3-11, Interior(1) 26-3-11 to 35-0-15 zone; cantilever left and right exposed ; porch left and right exposed;C-C for members and forces & MWFRS for reactions shown; Lumber DOL=1.33 plate grip DOL=1.33
2) TCLL: ASCE 7-10; Pf=30.0 psf (flat roof snow); Category II; Exp C; Partially Exp.; Ct=1.00
3) Unbalanced snow loads have been considered for this design.
4) Provide adequate drainage to prevent water ponding.
5) All plates are MT20 plates unless otherwise indicated.
6) This truss has been designed for a 10.0 psf bottom chord live load nonconcurrent with any other live loads.
7) * This truss has been designed for a live load of 20.0psf on the bottom chord in all areas where a rectangle 3-6-0 tall by 2-0-0 wide will fit between the bottom chord and any other members, with BCDL = 10.0psf.
8) A plate rating reduction of 20% has been applied for the green lumber members.
9) Bearing at joint(s) 10 considers parallel to grain value using ANSI/TPI 1 angle to grain formula. Building designer should verify capacity of bearing surface.
10) Provide mechanical connection (by others) of truss to bearing plate capable of withstanding 100 lb uplift at joint(s) 10 except (jt=lb) 12=353, 16=207.
11) Graphical purlin representation does not depict the size or the orientation of the purlin along the top and/or bottom chord.
12) Hanger(s) or other connection device(s) shall be provided sufficient to support concentrated load(s) 195 lb down and 116 lb up at 15-11-10, 155 lb down and 81 lb up at 18-0-12, and 155 lb down and 81 lb up at 19-6-0, and 219 lb down and 115 lb up at 21-7-1 on top chord. The design/selection of such connection device(s) is the responsibility of others.
13) This truss is designed for a creep factor of 3.01, which is used to calculate the Vert(CT) deflection per ANSI/TPI 1.

LOAD CASE(S) Standard

Continued on page 2

December 11,2019

WARNING - Verify design parameters and READ NOTES ON THIS AND INCLUDED MITEK REFERENCE PAGE MII-7473 rev. 10/03/2015 BEFORE USE.
Design valid for use only with MiTek® connectors. This design is based only upon parameters shown, and is for an individual building component, not a truss system. Before use, the building designer must verify the applicability of design parameters and properly incorporate this design into the overall building design. Bracing indicated is to prevent buckling of individual truss web and/or chord members only. Additional temporary and permanent bracing is always required for stability and to prevent collapse with possible personal injury and property damage. For general guidance regarding the fabrication, storage, delivery, erection and bracing of trusses and truss systems, see ***ANSI/TPI1 Quality Criteria, DSB-89 and BCSI Building Component Safety Information*** available from Truss Plate Institute, 218 N. Lee Street, Suite 312, Alexandria, VA 22314.

MiTek USA, Inc.
400 Sunrise Avenue, Suite 270
Roseville, CA 95661

LOAD CASE(S) Standard

1) Dead + Snow (balanced): Lumber Increase=1.15, Plate Increase=1.15
   Uniform Loads (plf)
   Vert: 1-5=-88, 5-6=-88, 6-9=-88, 12-17=-20, 11-12=-20, 10-11=-20
   Concentrated Loads (lb)
   Vert: 24=-76 25=-75 26=-75 28=-100

WARNING - Verify design parameters and READ NOTES ON THIS AND INCLUDED MITEK REFERENCE PAGE MII-7473 rev. 10/03/2015 BEFORE USE.
Design valid for use only with MiTek® connectors. This design is based only upon parameters shown, and is for an individual building component, not a truss system. Before use, the building designer must verify the applicability of design parameters and properly incorporate this design into the overall building design. Bracing indicated is to prevent buckling of individual truss web and/or chord members only. Additional temporary and permanent bracing is always required for stability and to prevent collapse with possible personal injury and property damage. For general guidance regarding the fabrication, storage, delivery, erection and bracing of trusses and truss systems, see ***ANSI/TPI1 Quality Criteria, DSB-89 and BCSI Building Component Safety Information*** available from Truss Plate Institute, 218 N. Lee Street, Suite 312, Alexandria, VA 22314.

MiTek USA, Inc.
400 Sunrise Avenue, Suite 270
Roseville, CA 95661

Job	Truss	Truss Type	Qty	Ply	ESPINOZA R60548627
J19-319	C04	California	1	1	Job Reference (optional)

Stockton Truss, STOCKTON, CA 95215 8.330 s Dec 5 2019 MiTek Industries, Inc. Tue Dec 10 11:43:09 2019 Page 1
ID:eURouH3h5RzkGDllLuCRE8yWpf_-fGFAOZERe8aPq_DIWgyQ7r18Q9NHE0jCHHA11MyANbG

4-2-7	7-8-12	13-5-15	13-10-15	18-9-6	23-7-13	23-11-0	29-8-9	35-4-12
4-2-7	3-6-5	5-9-3	0-5-0	4-10-7	4-10-7	0-3-3	5-9-9	5-8-2

Scale = 1:61.0

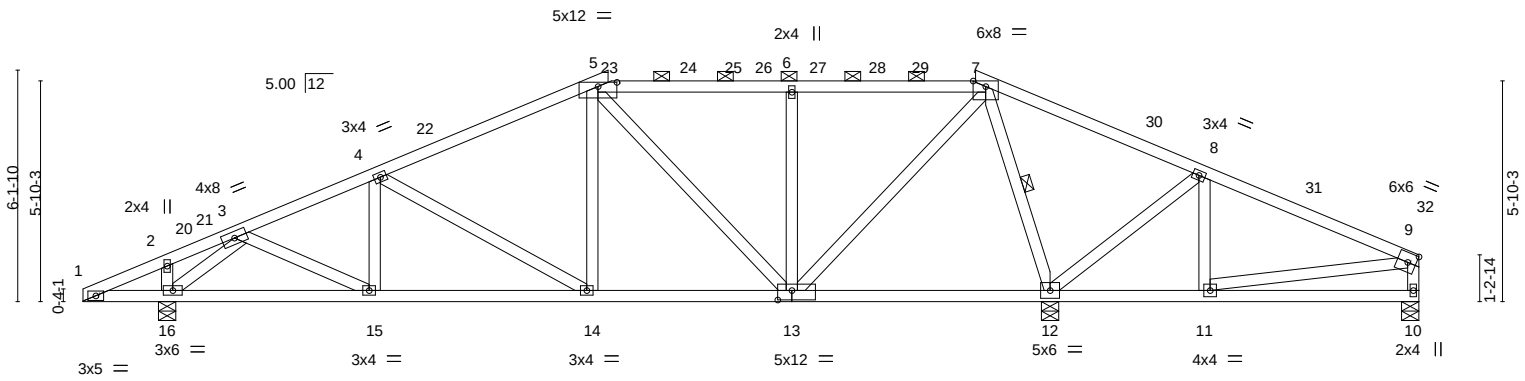

2-0-0	7-8-12	13-5-15	18-9-6	25-7-8	29-8-9	35-4-12
2-0-0	5-8-12	5-9-3	5-3-7	6-10-2	4-1-2	5-8-2

Plate Offsets (X,Y)-- [5:0-6-0,0-1-6], [7:0-4-0,0-1-12], [13:0-4-8,0-3-0]

LOADING (psf)		SPACING-	2-0-0	CSI.		DEFL.	in	(loc)	l/defl	L/d	PLATES	GRIP
TCLL	30.0	Plate Grip DOL	1.15	TC	0.72	Vert(LL)	-0.08	14-15	>999	240	MT20	220/195
(Roof Snow=30.0)		Lumber DOL	1.15	BC	0.34	Vert(CT)	-0.17	14-15	>999	180		
TCDL	14.0	Rep Stress Incr	YES	WB	0.78	Horz(CT)	0.05	10	n/a	n/a		
BCLL	0.0 *	Code	IBC2015/TPI2014	Matrix-MSH		Wind(LL)	0.05	12-13	>999	360	Weight: 186 lb	FT = 20%
BCDL	10.0											

LUMBER-
TOP CHORD 2x4 DF No.1&Btr G
BOT CHORD 2x4 DF No.1&Btr G
WEBS 2x4 DF Std G

BRACING-
TOP CHORD Structural wood sheathing directly applied or 3-10-12 oc purlins, except end verticals, and 2-0-0 oc purlins (5-9-4 max.): 5-7.
BOT CHORD Rigid ceiling directly applied or 6-0-0 oc bracing.
WEBS 1 Row at midpt 7-12

REACTIONS. (lb/size) 12=2586/0-5-8, 16=1508/0-5-8, 10=190/0-5-8
Max Horz 16=69(LC 14)
Max Uplift 12=-414(LC 11), 16=-214(LC 10), 10=-17(LC 34)
Max Grav 12=3110(LC 32), 16=2002(LC 32), 10=360(LC 44)

FORCES. (lb) - Max. Comp./Max. Ten. - All forces 250 (lb) or less except when shown.
TOP CHORD 1-2=-57/300, 3-4=-2273/704, 4-5=-1798/584, 5-6=-1132/426, 6-7=-1150/432, 7-8=-211/1029, 8-9=-253/353, 9-10=-304/70
BOT CHORD 15-16=-399/1394, 14-15=-612/2066, 13-14=-421/1516, 11-12=-273/149
WEBS 3-15=-236/746, 4-14=-618/211, 5-14=-241/417, 5-13=-655/209, 6-13=-848/130, 7-13=-591/1767, 7-12=-2424/629, 8-12=-1069/313, 3-16=-2183/546, 2-16=-382/82, 9-11=-343/133

NOTES-
1) Wind: ASCE 7-10; Vult=110mph (3-second gust) Vasd=87mph; TCDL=7.2psf; BCDL=4.2psf; h=25ft; Cat. II; Exp C; Enclosed; MWFRS (envelope) and C-C Exterior(2) 0-0-0 to 3-0-0, Interior(1) 3-0-0 to 13-7-12, Exterior(2) 13-7-12 to 17-10-10, Interior(1) 17-10-10 to 23-9-4, Exterior(2) 23-9-4 to 28-0-3, Interior(1) 28-0-3 to 35-2-15 zone; cantilever left and right exposed ; porch left and right exposed;C-C for members and forces & MWFRS for reactions shown; Lumber DOL=1.33 plate grip DOL=1.33
2) TCLL: ASCE 7-10; Pf=30.0 psf (flat roof snow); Category II; Exp C; Partially Exp.; Ct=1.00
3) Unbalanced snow loads have been considered for this design.
4) Provide adequate drainage to prevent water ponding.
5) This truss has been designed for a 10.0 psf bottom chord live load nonconcurrent with any other live loads.
6) * This truss has been designed for a live load of 20.0psf on the bottom chord in all areas where a rectangle 3-6-0 tall by 2-0-0 wide will fit between the bottom chord and any other members.
7) A plate rating reduction of 20% has been applied for the green lumber members.
8) Provide mechanical connection (by others) of truss to bearing plate capable of withstanding 100 lb uplift at joint(s) 10 except (jt=lb) 12=414, 16=214.
9) Graphical purlin representation does not depict the size or the orientation of the purlin along the top and/or bottom chord.
10) Hanger(s) or other connection device(s) shall be provided sufficient to support concentrated load(s) 186 lb down and 119 lb up at 13-11-10, 150 lb down and 81 lb up at 16-0-12, 161 lb down and 84 lb up at 18-0-12, 161 lb down and 84 lb up at 19-6-0, and 150 lb down and 81 lb up at 21-6-0, and 236 lb down and 120 lb up at 23-9-4 on top chord. The design/selection of such connection device(s) is the responsibility of others.
11) This truss is designed for a creep factor of 3.01, which is used to calculate the Vert(CT) deflection per ANSI/TPI 1.

LOAD CASE(S) Standard

December 11,2019

Continued on page 2

WARNING - Verify design parameters and READ NOTES ON THIS AND INCLUDED MITEK REFERENCE PAGE MII-7473 rev. 10/03/2015 BEFORE USE.
Design valid for use only with MiTek® connectors. This design is based only upon parameters shown, and is for an individual building component, not a truss system. Before use, the building designer must verify the applicability of design parameters and properly incorporate this design into the overall building design. Bracing indicated is to prevent buckling of individual truss web and/or chord members only. Additional temporary and permanent bracing is always required for stability and to prevent collapse with possible personal injury and property damage. For general guidance regarding the fabrication, storage, delivery, erection and bracing of trusses and truss systems, see ***ANSI/TPI1 Quality Criteria, DSB-89 and BCSI Building Component Safety Information*** available from Truss Plate Institute, 218 N. Lee Street, Suite 312, Alexandria, VA 22314.

MiTek USA, Inc.
400 Sunrise Avenue, Suite 270
Roseville, CA 95661

LOAD CASE(S) Standard

1) Dead + Snow (balanced): Lumber Increase=1.15, Plate Increase=1.15
   Uniform Loads (plf)
   Vert: 1-5=-88, 5-7=-88, 7-9=-88, 10-17=-20
   Concentrated Loads (lb)
   Vert: 7=-117 23=-67 24=-69 26=-77 27=-77 29=-69

WARNING - Verify design parameters and READ NOTES ON THIS AND INCLUDED MITEK REFERENCE PAGE MII-7473 rev. 10/03/2015 BEFORE USE.
Design valid for use only with MiTek® connectors. This design is based only upon parameters shown, and is for an individual building component, not a truss system. Before use, the building designer must verify the applicability of design parameters and properly incorporate this design into the overall building design. Bracing indicated is to prevent buckling of individual truss web and/or chord members only. Additional temporary and permanent bracing is always required for stability and to prevent collapse with possible personal injury and property damage. For general guidance regarding the fabrication, storage, delivery, erection and bracing of trusses and truss systems, see ***ANSI/TPI1 Quality Criteria, DSB-89 and BCSI Building Component Safety Information*** available from Truss Plate Institute, 218 N. Lee Street, Suite 312, Alexandria, VA 22314.

MiTek USA, Inc.
400 Sunrise Avenue, Suite 270
Roseville, CA 95661

Job	Truss	Truss Type	Qty	Ply	ESPINOZA R60548628
J19-319	C05	California	1	1	Job Reference (optional)

Stockton Truss, STOCKTON, CA 95215 8.330 s Dec 5 2019 MiTek Industries, Inc. Tue Dec 10 11:43:11 2019 Page 1
ID:eURouH3h5RzkGDllLuCRE8yWpf_-bfNxpFFhAmq63HNhe5_uDG7XZy38iv4Vkbf86EyANbE

6-8-12	11-5-15	11-10-15	16-3-2	21-3-9	25-7-13	25-11-0	30-8-9	35-4-12
6-8-12	4-9-3	0-5-0	4-4-3	5-0-7	4-4-3	0-3-3	4-9-9	4-8-2

Scale = 1:61.0

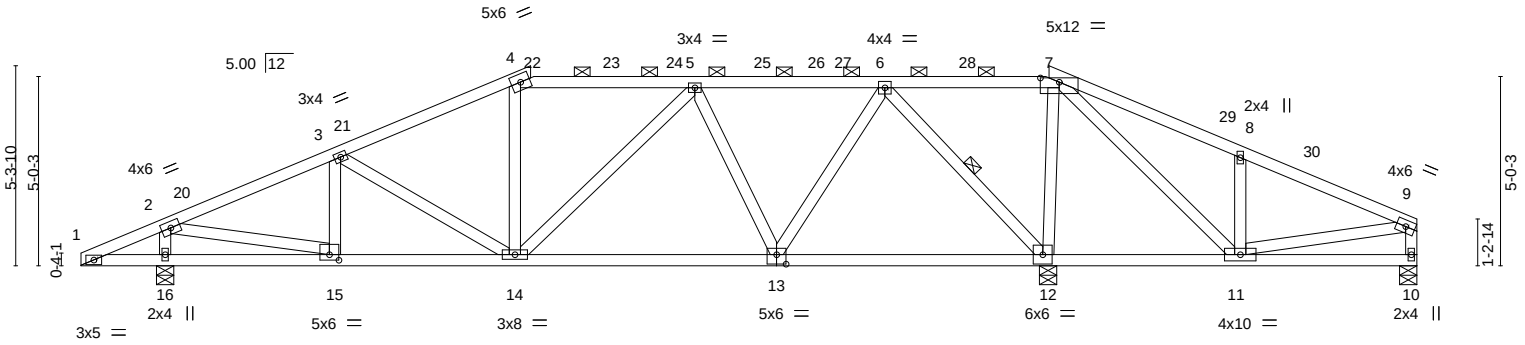

2-0-0	6-8-12	11-5-15	18-5-2	25-7-8	25-7-9	30-8-9	35-4-12
2-0-0	4-8-12	4-9-3	6-11-3	7-2-5	0-0-1	5-1-1	4-8-2

Plate Offsets (X,Y)-- [7:0-6-0,0-1-6], [13:0-3-0,0-3-0], [15:0-3-0,0-1-12]

LOADING (psf)		SPACING-	2-0-0	CSI.		DEFL.	in	(loc)	l/defl	L/d	PLATES	GRIP
TCLL	30.0	Plate Grip DOL	1.15	TC	0.49	Vert(LL)	-0.07	14-15	>999	240	MT20	220/195
(Roof Snow=30.0)		Lumber DOL	1.15	BC	0.31	Vert(CT)	-0.18	13-14	>999	180		
TCDL	14.0	Rep Stress Incr	YES	WB	0.85	Horz(CT)	0.03	12	n/a	n/a		
BCLL	0.0 *	Code	IBC2015/TPI2014	Matrix-MSH		Wind(LL)	0.06	13-14	>999	360	Weight: 182 lb	FT = 20%
BCDL	10.0											

LUMBER-
TOP CHORD 2x4 DF No.1&Btr G
BOT CHORD 2x4 DF No.1&Btr G
WEBS 2x4 DF Std G

BRACING-
TOP CHORD Structural wood sheathing directly applied or 4-6-7 oc purlins, except end verticals, and 2-0-0 oc purlins (5-2-13 max.): 4-7.
BOT CHORD Rigid ceiling directly applied or 6-0-0 oc bracing.
WEBS 1 Row at midpt 6-12

REACTIONS. (lb/size) 12=2786/0-5-8, 16=1428/0-5-8, 10=38/0-5-8
Max Horz 16=62(LC 14)
Max Uplift 12=-484(LC 11), 16=-214(LC 10), 10=-176(LC 34)
Max Grav 12=3167(LC 32), 16=1864(LC 32), 10=322(LC 44)

FORCES. (lb) - Max. Comp./Max. Ten. - All forces 250 (lb) or less except when shown.
TOP CHORD 2-3=-2056/647, 3-4=-1723/603, 4-5=-1468/583, 5-6=-1019/401, 6-7=-272/1069, 7-8=-251/559, 8-9=-249/556, 9-10=-278/218
BOT CHORD 14-15=-569/1792, 13-14=-368/1342, 12-13=-75/505, 11-12=-1015/385
WEBS 3-15=-348/46, 3-14=-400/129, 5-14=-127/392, 5-13=-906/212, 6-13=-451/1127, 6-12=-2060/654, 7-12=-1509/398, 7-11=-395/1212, 8-11=-735/136, 2-15=-577/1933, 2-16=-1727/443, 9-11=-517/162

NOTES-
1) Wind: ASCE 7-10; Vult=110mph (3-second gust) Vasd=87mph; TCDL=7.2psf; BCDL=4.2psf; h=25ft; Cat. II; Exp C; Enclosed; MWFRS (envelope) and C-C Exterior(2) 0-0-0 to 3-0-0, Interior(1) 3-0-0 to 11-5-15, Exterior(2) 11-5-15 to 15-8-14, Interior(1) 15-8-14 to 25-9-4, Exterior(2) 25-9-4 to 30-0-3, Interior(1) 30-0-3 to 35-2-15 zone; cantilever left and right exposed ; porch left and right exposed;C-C for members and forces & MWFRS for reactions shown; Lumber DOL=1.33 plate grip DOL=1.33
2) TCLL: ASCE 7-10; Pf=30.0 psf (flat roof snow); Category II; Exp C; Partially Exp.; Ct=1.00
3) Unbalanced snow loads have been considered for this design.
4) Provide adequate drainage to prevent water ponding.
5) This truss has been designed for a 10.0 psf bottom chord live load nonconcurrent with any other live loads.
6) * This truss has been designed for a live load of 20.0psf on the bottom chord in all areas where a rectangle 3-6-0 tall by 2-0-0 wide will fit between the bottom chord and any other members.
7) A plate rating reduction of 20% has been applied for the green lumber members.
8) Provide mechanical connection (by others) of truss to bearing plate capable of withstanding 100 lb uplift at joint(s) except (jt=lb) 12=484, 16=214, 10=176.
9) Graphical purlin representation does not depict the size or the orientation of the purlin along the top and/or bottom chord.
10) Hanger(s) or other connection device(s) shall be provided sufficient to support concentrated load(s) 120 lb down and 115 lb up at 11-11-10, 143 lb down and 81 lb up at 14-0-12, 156 lb down and 84 lb up at 16-0-12, 139 lb down and 84 lb up at 18-0-12, 139 lb down and 84 lb up at 19-6-0, 156 lb down and 84 lb up at 21-6-0, and 143 lb down and 81 lb up at 23-6-0, and 184 lb down and 120 lb up at 25-9-4 on top chord. The design/selection of such connection device(s) is the responsibility of others.
11) This truss is designed for a creep factor of 3.01, which is used to calculate the Vert(CT) deflection per ANSI/TPI 1.

LOAD CASE(S) Standard

REGISTERED PROFESSIONAL ENGINEER
EDUARD TEODOSESCU
C 75435
EXP. 03/31/2020
STATE OF CALIFORNIA

December 11,2019

Continued on page 2

WARNING - Verify design parameters and READ NOTES ON THIS AND INCLUDED MITEK REFERENCE PAGE MII-7473 rev. 10/03/2015 BEFORE USE.
Design valid for use only with MiTek® connectors. This design is based only upon parameters shown, and is for an individual building component, not a truss system. Before use, the building designer must verify the applicability of design parameters and properly incorporate this design into the overall building design. Bracing indicated is to prevent buckling of individual truss web and/or chord members only. Additional temporary and permanent bracing is always required for stability and to prevent collapse with possible personal injury and property damage. For general guidance regarding the fabrication, storage, delivery, erection and bracing of trusses and truss systems, see ***ANSI/TPI1 Quality Criteria, DSB-89 and BCSI Building Component Safety Information*** available from Truss Plate Institute, 218 N. Lee Street, Suite 312, Alexandria, VA 22314.

MiTek USA, Inc.
400 Sunrise Avenue, Suite 270
Roseville, CA 95661

LOAD CASE(S) Standard

1) Dead + Snow (balanced): Lumber Increase=1.15, Plate Increase=1.15
   Uniform Loads (plf)
   Vert: 1-4=-88, 4-7=-88, 7-9=-88, 10-17=-20
   Concentrated Loads (lb)
   Vert: 7=-65 5=-72 6=-72 22=-1 23=-63 25=-55 26=-55 28=-63

WARNING - Verify design parameters and READ NOTES ON THIS AND INCLUDED MITEK REFERENCE PAGE MII-7473 rev. 10/03/2015 BEFORE USE.
Design valid for use only with MiTek® connectors. This design is based only upon parameters shown, and is for an individual building component, not a truss system. Before use, the building designer must verify the applicability of design parameters and properly incorporate this design into the overall building design. Bracing indicated is to prevent buckling of individual truss web and/or chord members only. Additional temporary and permanent bracing is always required for stability and to prevent collapse with possible personal injury and property damage. For general guidance regarding the fabrication, storage, delivery, erection and bracing of trusses and truss systems, see ***ANSI/TPI1 Quality Criteria, DSB-89 and BCSI Building Component Safety Information*** available from Truss Plate Institute, 218 N. Lee Street, Suite 312, Alexandria, VA 22314.

MiTek USA, Inc.
400 Sunrise Avenue, Suite 270
Roseville, CA 95661

Job	Truss	Truss Type	Qty	Ply	ESPINOZA R60548629
J19-319	C06	California	1	1	Job Reference (optional)

Stockton Truss, STOCKTON, CA 95215 8.330 s Dec 5 2019 MiTek Industries, Inc. Tue Dec 10 11:43:13 2019 Page 1
ID:eURouH3h5RzkGDllLuCRE8yWpf_-Y1UhExHxiN4qJbX3lV1MIhCrGmlhAtlnCv8EA7yANbC

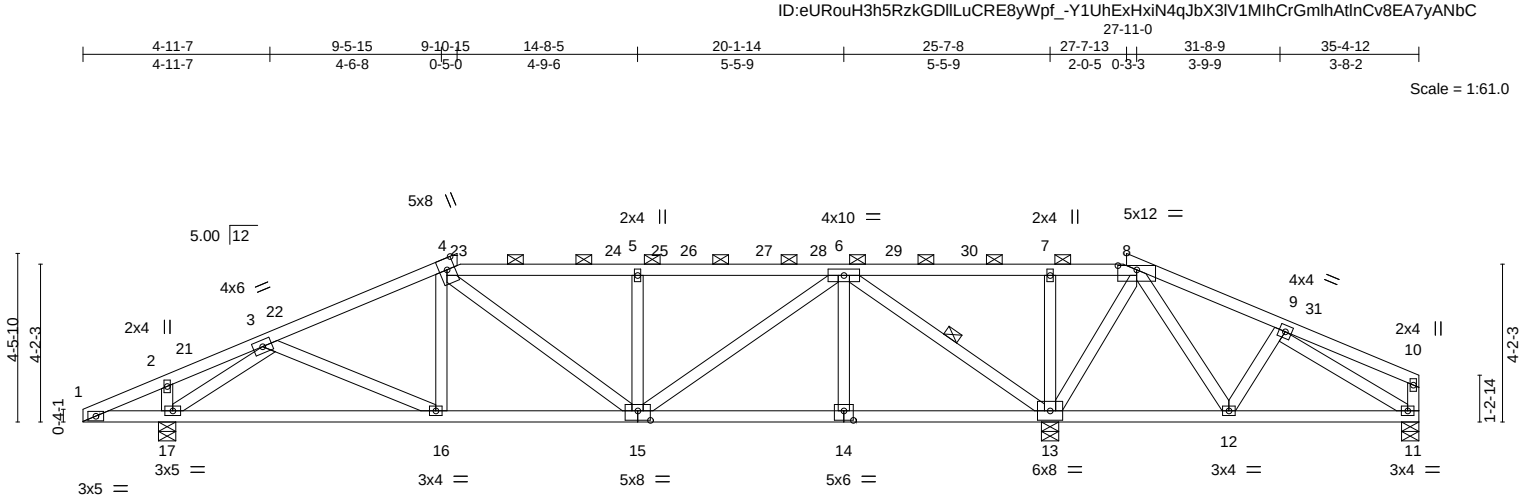

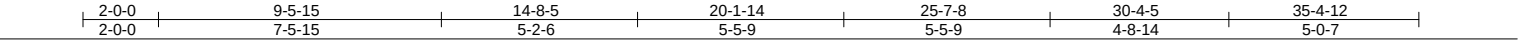

Plate Offsets (X,Y)-- [8:0-6-0,0-1-6], [14:0-3-0,0-3-0], [15:0-4-0,0-3-0]

LOADING (psf)		SPACING-	2-0-0	CSI.		DEFL.	in	(loc)	l/defl	L/d	PLATES	GRIP
TCLL	30.0	Plate Grip DOL	1.15	TC	0.60	Vert(LL)	-0.08	15	>999	240	MT20	220/195
(Roof Snow=30.0)		Lumber DOL	1.15	BC	0.31	Vert(CT)	-0.17	14-15	>999	180		
TCDL	14.0	Rep Stress Incr	YES	WB	0.59	Horz(CT)	0.05	13	n/a	n/a		
BCLL	0.0 *	Code	IBC2015/TPI2014	Matrix-MSH		Wind(LL)	0.07	16-17	>999	360	Weight: 180 lb	FT = 20%
BCDL	10.0											

LUMBER-
TOP CHORD 2x4 DF No.1&Btr G
BOT CHORD 2x4 DF No.1&Btr G
WEBS 2x4 DF Std G

BRACING-
TOP CHORD Structural wood sheathing directly applied or 4-9-8 oc purlins, except end verticals, and 2-0-0 oc purlins (4-4-7 max.): 4-8.
BOT CHORD Rigid ceiling directly applied or 6-0-0 oc bracing.
WEBS 1 Row at midpt 6-13

REACTIONS. (lb/size) 13=2383/0-5-8, 17=1350/0-5-8, 11=103/0-5-8
Max Horz 17=53(LC 14)
Max Uplift 13=-448(LC 11), 17=-210(LC 10), 11=-170(LC 31)
Max Grav 13=2939(LC 31), 17=1662(LC 32), 11=319(LC 44)

FORCES. (lb) - Max. Comp./Max. Ten. - All forces 250 (lb) or less except when shown.
TOP CHORD 1-2=-41/292, 2-3=-28/323, 3-4=-1715/671, 4-5=-1863/640, 5-6=-1862/639, 6-7=-347/1167, 7-8=-344/1171, 8-9=-127/598
BOT CHORD 16-17=-480/1315, 15-16=-548/1571, 14-15=-221/956, 13-14=-221/956, 12-13=-756/277, 11-12=-375/232
WEBS 3-16=-117/427, 4-15=-179/368, 5-15=-769/111, 6-15=-394/1112, 6-13=-2604/817, 7-13=-529/73, 8-13=-1079/389, 8-12=-287/654, 9-12=-542/132, 3-17=-1940/564, 2-17=-281/53, 9-11=-226/480

NOTES-
1) Wind: ASCE 7-10; Vult=110mph (3-second gust) Vasd=87mph; TCDL=7.2psf; BCDL=4.2psf; h=25ft; Cat. II; Exp C; Enclosed; MWFRS (envelope) and C-C Exterior(2) 0-0-0 to 3-0-0, Interior(1) 3-0-0 to 9-7-12, Exterior(2) 9-7-12 to 13-10-10, Interior(1) 13-10-10 to 27-9-4, Exterior(2) 27-9-4 to 31-9-8, Interior(1) 31-9-8 to 35-2-15 zone; cantilever left and right exposed ; porch left and right exposed;C-C for members and forces & MWFRS for reactions shown; Lumber DOL=1.33 plate grip DOL=1.33
2) TCLL: ASCE 7-10; Pf=30.0 psf (flat roof snow); Category II; Exp C; Partially Exp.; Ct=1.00
3) Unbalanced snow loads have been considered for this design.
4) Provide adequate drainage to prevent water ponding.
5) This truss has been designed for a 10.0 psf bottom chord live load nonconcurrent with any other live loads.
6) * This truss has been designed for a live load of 20.0psf on the bottom chord in all areas where a rectangle 3-6-0 tall by 2-0-0 wide will fit between the bottom chord and any other members.
7) A plate rating reduction of 20% has been applied for the green lumber members.
8) Provide mechanical connection (by others) of truss to bearing plate capable of withstanding 100 lb uplift at joint(s) except (jt=lb) 13=448, 17=210, 11=170.
9) Graphical purlin representation does not depict the size or the orientation of the purlin along the top and/or bottom chord.
10) Hanger(s) or other connection device(s) shall be provided sufficient to support concentrated load(s) 116 lb down and 114 lb up at 9-11-10, 95 lb down and 57 lb up at 14-0-12, 66 lb down and 56 lb up at 16-0-12, 35 lb down and 56 lb up at 18-0-12, 35 lb down and 56 lb up at 19-6-0, 66 lb down and 56 lb up at 21-6-0, 93 lb down and 56 lb up at 23-6-0, and 82 lb down and 53 lb up at 25-6-0, and 127 lb down and 119 lb up at 27-9-4 on top chord. The design/selection of such connection device(s) is the responsibility of others.
11) This truss is designed for a creep factor of 3.01, which is used to calculate the Vert(CT) deflection per ANSI/TPI 1.

December 11,2019

LOAD CASE(S) Standard

Continued on page 2

WARNING - Verify design parameters and READ NOTES ON THIS AND INCLUDED MITEK REFERENCE PAGE MII-7473 rev. 10/03/2015 BEFORE USE.
Design valid for use only with MiTek® connectors. This design is based only upon parameters shown, and is for an individual building component, not a truss system. Before use, the building designer must verify the applicability of design parameters and properly incorporate this design into the overall building design. Bracing indicated is to prevent buckling of individual truss web and/or chord members only. Additional temporary and permanent bracing is always required for stability and to prevent collapse with possible personal injury and property damage. For general guidance regarding the fabrication, storage, delivery, erection and bracing of trusses and truss systems, see ***ANSI/TPI1 Quality Criteria, DSB-89 and BCSI Building Component Safety Information*** available from Truss Plate Institute, 218 N. Lee Street, Suite 312, Alexandria, VA 22314.

MiTek USA, Inc.
400 Sunrise Avenue, Suite 270
Roseville, CA 95661

LOAD CASE(S) Standard

1) Dead + Snow (balanced): Lumber Increase=1.15, Plate Increase=1.15
   Uniform Loads (plf)
   Vert: 1-4=-88, 4-8=-88, 8-10=-88, 11-18=-20
   Concentrated Loads (lb)
   Vert: 8=-8 7=-1 24=-11 30=-9

WARNING - Verify design parameters and READ NOTES ON THIS AND INCLUDED MITEK REFERENCE PAGE MII-7473 rev. 10/03/2015 BEFORE USE.
Design valid for use only with MiTek® connectors. This design is based only upon parameters shown, and is for an individual building component, not a truss system. Before use, the building designer must verify the applicability of design parameters and properly incorporate this design into the overall building design. Bracing indicated is to prevent buckling of individual truss web and/or chord members only. Additional temporary and permanent bracing is always required for stability and to prevent collapse with possible personal injury and property damage. For general guidance regarding the fabrication, storage, delivery, erection and bracing of trusses and truss systems, see ***ANSI/TPI1 Quality Criteria, DSB-89 and BCSI Building Component Safety Information*** available from Truss Plate Institute, 218 N. Lee Street, Suite 312, Alexandria, VA 22314.

MiTek USA, Inc.
400 Sunrise Avenue, Suite 270
Roseville, CA 95661

Job	Truss	Truss Type	Qty	Ply	ESPINOZA
J19-319	C07	California Girder	1	2	R60548630

Job Reference (optional)

Stockton Truss, STOCKTON, CA 95215 8.330 s Dec 5 2019 MiTek Industries, Inc. Tue Dec 10 11:43:16 2019 Page 1

ID:eURouH3h5RzkGDllLuCRE8yWpf_-ycAqsyJq?ISPA3GeQea3wKqK2zkpMDQEutMvnSyANb9

4-1-14	7-5-15	7-10-15	11-9-15	16-5-2	21-0-5	25-7-8	29-7-13	30-0-12	35-4-12
4-1-14	3-4-1	0-5-0	3-11-0	4-7-3	4-7-3	4-7-3	4-0-5	0-5-0	5-3-15

Scale = 1:61.7

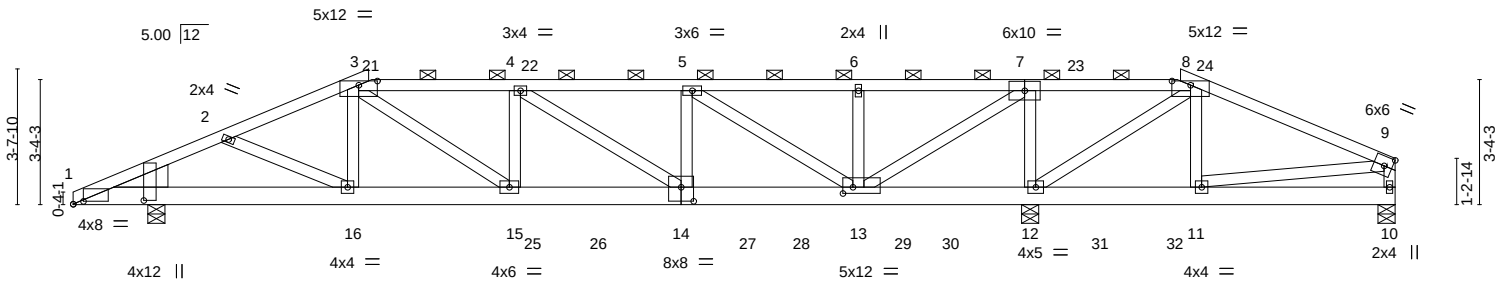

2-0-0	7-5-15	11-9-15	16-5-2	21-0-5	25-7-8	30-0-12	35-4-12
2-0-0	5-5-15	4-4-0	4-7-3	4-7-3	4-7-3	4-5-5	5-3-15

Plate Offsets (X,Y)-- [1:0-1-3,1-10-11], [1:0-3-5,0-0-15], [3:0-6-0,0-1-6], [8:0-6-0,0-1-6], [13:0-3-4,0-2-0], [14:0-4-0,0-4-8]

LOADING (psf)		SPACING-	2-0-0	CSI.		DEFL.	in	(loc)	l/defl	L/d	PLATES	GRIP
TCLL	30.0	Plate Grip DOL	1.15	TC	0.76	Vert(LL)	-0.13	14-15	>999	240	MT20	220/195
(Roof Snow=30.0)		Lumber DOL	1.15	BC	0.41	Vert(CT)	-0.28	14-15	>999	180		
TCDL	14.0	Rep Stress Incr	NO	WB	0.65	Horz(CT)	0.03	12	n/a	n/a		
BCLL	0.0 *	Code	IBC2015/TPI2014	Matrix-MSH		Wind(LL)	0.07	14-15	>999	360	Weight: 402 lb	FT = 20%
BCDL	10.0											

LUMBER-

TOP CHORD 2x4 DF No.1&Btr G
BOT CHORD 2x6 DF SS G
WEBS 2x4 DF Std G *Except*
4-14,5-13,7-13: 2x4 DF No.1&Btr G
WEDGE
Left: 2x8 DF SS

BRACING-

TOP CHORD Structural wood sheathing directly applied or 6-0-0 oc purlins, except end verticals, and 2-0-0 oc purlins (5-8-3 max.): 3-8.
BOT CHORD Rigid ceiling directly applied or 6-0-0 oc bracing.

REACTIONS. (lb/size) 12=6803/0-5-8, 10=-473/0-5-8, 1=2410/0-5-8
Max Horz 1=45(LC 10)
Max Uplift 12=-1268(LC 7), 10=-757(LC 27), 1=-367(LC 7)
Max Grav 12=7624(LC 27), 10=292(LC 38), 1=2530(LC 28)

FORCES. (lb) - Max. Comp./Max. Ten. - All forces 250 (lb) or less except when shown.
TOP CHORD 1-2=-2891/425, 2-3=-3815/571, 3-4=-6049/864, 4-5=-5544/889, 5-6=-1778/346, 6-7=-1778/346, 7-8=-677/4400, 8-9=-237/1743, 9-10=-268/774
BOT CHORD 1-16=-337/2327, 15-16=-510/3631, 14-15=-825/6049, 13-14=-836/5458, 12-13=-4166/680, 11-12=-1617/234
WEBS 2-16=-186/1383, 3-16=-862/93, 3-15=-386/2965, 4-15=-275/150, 4-14=-607/0, 5-14=-286/1723, 5-13=-4379/630, 6-13=-570/43, 7-13=-1185/7143, 7-12=-4692/729, 8-12=-3383/587, 8-11=-134/737, 9-11=-1575/234

NOTES-

1) 2-ply truss to be connected together with 10d (0.131"x3") nails as follows:
Top chords connected as follows: 2x4 - 1 row at 0-9-0 oc.
Bottom chords connected as follows: 2x6 - 2 rows staggered at 0-7-0 oc.
Webs connected as follows: 2x4 - 1 row at 0-9-0 oc.
2) All loads are considered equally applied to all plies, except if noted as front (F) or back (B) face in the LOAD CASE(S) section. Ply to ply connections have been provided to distribute only loads noted as (F) or (B), unless otherwise indicated.
3) Wind: ASCE 7-10; Vult=110mph (3-second gust) Vasd=87mph; TCDL=7.2psf; BCDL=4.2psf; h=25ft; Cat. II; Exp C; Enclosed; MWFRS (envelope); cantilever left and right exposed ; porch left and right exposed; Lumber DOL=1.33 plate grip DOL=1.33
4) TCLL: ASCE 7-10; Pf=30.0 psf (flat roof snow); Category II; Exp C; Partially Exp.; Ct=1.00
5) Unbalanced snow loads have been considered for this design.
6) Provide adequate drainage to prevent water ponding.
7) This truss has been designed for a 10.0 psf bottom chord live load nonconcurrent with any other live loads.
8) * This truss has been designed for a live load of 20.0psf on the bottom chord in all areas where a rectangle 3-6-0 tall by 2-0-0 wide will fit between the bottom chord and any other members.
9) A plate rating reduction of 20% has been applied for the green lumber members.
10) Provide mechanical connection (by others) of truss to bearing plate capable of withstanding 100 lb uplift at joint(s) except (jt=lb) 12=1268, 10=757, 1=367.
11) Graphical purlin representation does not depict the size or the orientation of the purlin along the top and/or bottom chord.

Continued on page 2

REGISTERED PROFESSIONAL ENGINEER
EDUARD TEODOSESCU
C 75435
EXP. 03/31/2020
STATE OF CALIFORNIA

December 11,2019

WARNING - Verify design parameters and READ NOTES ON THIS AND INCLUDED MITEK REFERENCE PAGE MII-7473 rev. 10/03/2015 BEFORE USE.
Design valid for use only with MiTek® connectors. This design is based only upon parameters shown, and is for an individual building component, not a truss system. Before use, the building designer must verify the applicability of design parameters and properly incorporate this design into the overall building design. Bracing indicated is to prevent buckling of individual truss web and/or chord members only. Additional temporary and permanent bracing is always required for stability and to prevent collapse with possible personal injury and property damage. For general guidance regarding the fabrication, storage, delivery, erection and bracing of trusses and truss systems, see ***ANSI/TPI1 Quality Criteria, DSB-89 and BCSI Building Component Safety Information*** available from Truss Plate Institute, 218 N. Lee Street, Suite 312, Alexandria, VA 22314.

MiTek USA, Inc.
400 Sunrise Avenue, Suite 270
Roseville, CA 95661

NOTES-

12) Hanger(s) or other connection device(s) shall be provided sufficient to support concentrated load(s) 83 lb down and 45 lb up at 7-11-10, and 365 lb down and 167 lb up at 29-7-1 on top chord, and 1136 lb down and 82 lb up at 12-3-11, 471 lb down and 104 lb up at 14-0-12, 441 lb down and 112 lb up at 16-0-12, 453 lb down and 112 lb up at 18-0-12, 453 lb down and 112 lb up at 19-6-0, 441 lb down and 112 lb up at 21-6-0, 447 lb down and 115 lb up at 23-6-0, and 537 lb down and 96 lb up at 27-6-0, and 310 lb down and 53 lb up at 29-6-0 on bottom chord. The design/selection of such connection device(s) is the responsibility of others.
13) This truss is designed for a creep factor of 3.01, which is used to calculate the Vert(CT) deflection per ANSI/TPI 1.

LOAD CASE(S) Standard

1) Dead + Snow (balanced): Lumber Increase=1.15, Plate Increase=1.15
   Uniform Loads (plf)
   Vert: 1-3=-88, 3-8=-88, 8-9=-88, 1-10=-20
   Concentrated Loads (lb)
   Vert: 14=-441(F) 24=-246 25=-1136(F) 26=-471(F) 27=-453(F) 28=-453(F) 29=-441(F) 30=-447(F) 31=-537(F) 32=-310(F)

WARNING - Verify design parameters and READ NOTES ON THIS AND INCLUDED MITEK REFERENCE PAGE MII-7473 rev. 10/03/2015 BEFORE USE.

Design valid for use only with MiTek® connectors. This design is based only upon parameters shown, and is for an individual building component, not a truss system. Before use, the building designer must verify the applicability of design parameters and properly incorporate this design into the overall building design. Bracing indicated is to prevent buckling of individual truss web and/or chord members only. Additional temporary and permanent bracing is always required for stability and to prevent collapse with possible personal injury and property damage. For general guidance regarding the fabrication, storage, delivery, erection and bracing of trusses and truss systems, see ***ANSI/TPI1 Quality Criteria, DSB-89 and BCSI Building Component Safety Information*** available from Truss Plate Institute, 218 N. Lee Street, Suite 312, Alexandria, VA 22314.

MiTek USA, Inc.
400 Sunrise Avenue, Suite 270
Roseville, CA 95661

Job	Truss	Truss Type	Qty	Ply	ESPINOZA R60548631
J19-319	CR01	Diagonal Hip Girder	1	1	Job Reference (optional)

Stockton Truss, STOCKTON, CA 95215 8.330 s Dec 5 2019 MiTek Industries, Inc. Tue Dec 10 11:43:17 2019 Page 1
ID:eURouH3h5RzkGDllLuCRE8yWpf_-QpkC3IKSmcaGnCrq_L5ISXMUJN2W5hzN6X6SJuyANb8

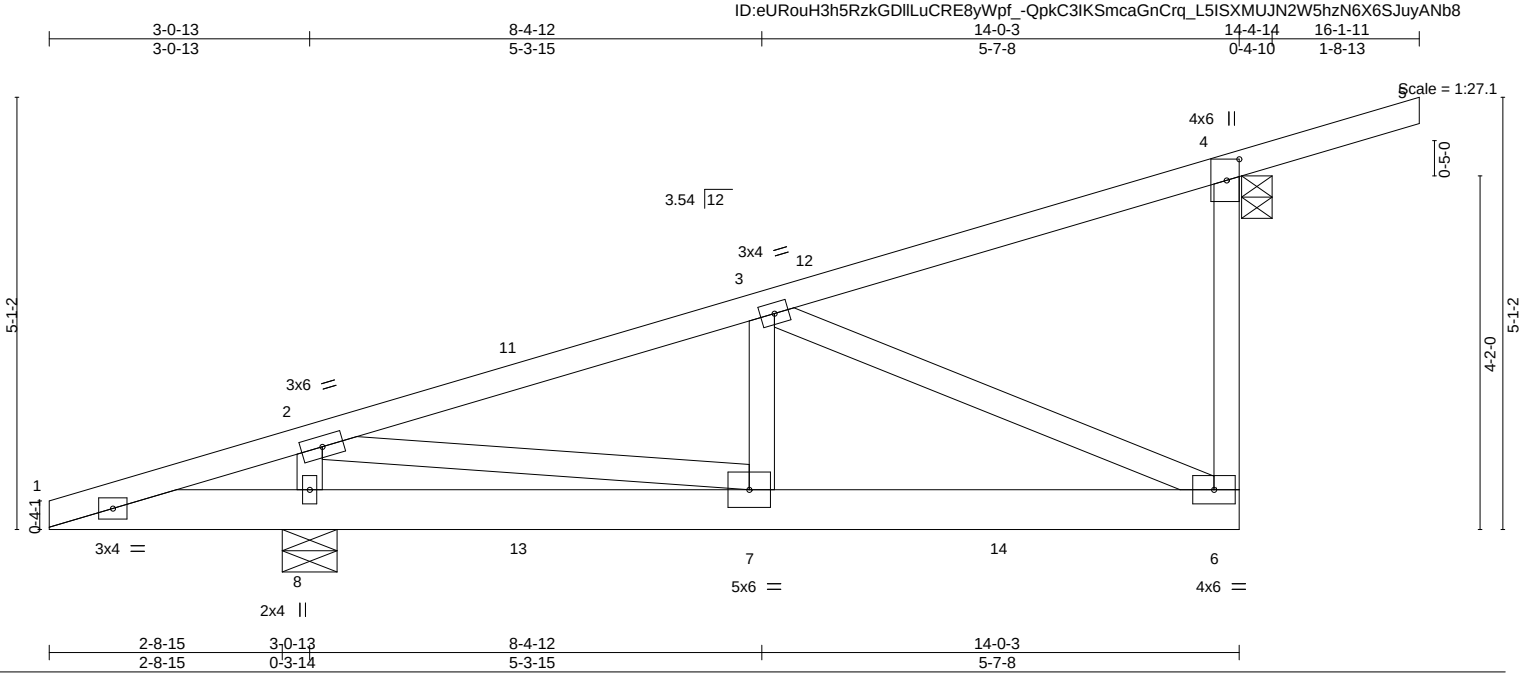

Plate Offsets (X,Y)-- [4:0-3-0,0-1-13]

LOADING (psf)		SPACING-	2-0-0	CSI.		DEFL.	in	(loc)	l/defl	L/d	PLATES	GRIP
TCLL	30.0	Plate Grip DOL	1.15	TC	0.79	Vert(LL)	-0.06	6-7	>999	240	MT20	220/195
(Roof Snow=30.0)		Lumber DOL	1.15	BC	0.57	Vert(CT)	-0.14	6-7	>915	180		
TCDL	14.0	Rep Stress Incr	NO	WB	0.64	Horz(CT)	-0.02	4	n/a	n/a		
BCLL	0.0 *	Code	IBC2015/TPI2014	Matrix-MSH		Wind(LL)	0.04	6-7	>999	360	Weight: 77 lb	FT = 20%
BCDL	10.0											

LUMBER-
TOP CHORD 2x4 DF No.1&Btr G
BOT CHORD 2x6 DF SS G
WEBS 2x4 DF Std G

BRACING-
TOP CHORD Structural wood sheathing directly applied or 6-0-0 oc purlins, except end verticals.
BOT CHORD Rigid ceiling directly applied or 6-0-0 oc bracing.

REACTIONS. (lb/size) 4=1204/0-4-5, 8=1027/0-7-12
Max Horz 8=121(LC 6)
Max Uplift 4=-262(LC 7), 8=-280(LC 6)
Max Grav 4=1381(LC 17), 8=1040(LC 17)

FORCES. (lb) - Max. Comp./Max. Ten. - All forces 250 (lb) or less except when shown.
TOP CHORD 1-2=0/408, 2-3=-1092/265, 4-6=-199/777
BOT CHORD 1-8=-342/0, 7-8=-374/0, 6-7=-320/985
WEBS 2-8=-1046/149, 2-7=-198/1319, 3-7=-257/210, 3-6=-1048/344

NOTES-
1) Wind: ASCE 7-10; Vult=110mph (3-second gust) Vasd=87mph; TCDL=7.2psf; BCDL=4.2psf; h=25ft; Cat. II; Exp C; Enclosed; MWFRS (envelope); cantilever left and right exposed ; porch left and right exposed; Lumber DOL=1.33 plate grip DOL=1.33
2) TCLL: ASCE 7-10; Pf=30.0 psf (flat roof snow); Category II; Exp C; Partially Exp.; Ct=1.00
3) Unbalanced snow loads have been considered for this design.
4) This truss has been designed for greater of min roof live load of 20.0 psf or 1.00 times flat roof load of 30.0 psf on overhangs non-concurrent with other live loads.
5) This truss has been designed for a 10.0 psf bottom chord live load nonconcurrent with any other live loads.
6) * This truss has been designed for a live load of 20.0psf on the bottom chord in all areas where a rectangle 3-6-0 tall by 2-0-0 wide will fit between the bottom chord and any other members.
7) A plate rating reduction of 20% has been applied for the green lumber members.
8) Provide mechanical connection (by others) of truss to bearing plate capable of withstanding 100 lb uplift at joint(s) except (jt=lb) 4=262, 8=280.
9) Beveled plate or shim required to provide full bearing surface with truss chord at joint(s) 4.
10) Gap between inside of top chord bearing and first diagonal or vertical web shall not exceed 0.500in.
11) Hanger(s) or other connection device(s) shall be provided sufficient to support concentrated load(s) 18 lb down and 10 lb up at 2-9-8, 18 lb down and 10 lb up at 2-9-8, 15 lb down and 11 lb up at 5-7-7, 15 lb down and 11 lb up at 5-7-7, 86 lb down and 37 lb up at 8-5-6, and 86 lb down and 37 lb up at 8-5-6, and 1 lb down and 1 lb up at 16-1-10 on top chord, and 15 lb down at 2-9-8, 15 lb down at 2-9-8, 114 lb up at 5-7-7, 114 lb up at 5-7-7, 16 lb up at 8-5-6, 16 lb up at 8-5-6, and 302 lb down and 61 lb up at 11-3-5, and 302 lb down and 61 lb up at 11-3-5 on bottom chord. The design/selection of such connection device(s) is the responsibility of others.
12) This truss is designed for a creep factor of 3.01, which is used to calculate the Vert(CT) deflection per ANSI/TPI 1.
13) In the LOAD CASE(S) section, loads applied to the face of the truss are noted as front (F) or back (B).

LOAD CASE(S) Standard

December 11,2019

Continued on page 2

WARNING - Verify design parameters and READ NOTES ON THIS AND INCLUDED MITEK REFERENCE PAGE MII-7473 rev. 10/03/2015 BEFORE USE.
Design valid for use only with MiTek® connectors. This design is based only upon parameters shown, and is for an individual building component, not a truss system. Before use, the building designer must verify the applicability of design parameters and properly incorporate this design into the overall building design. Bracing indicated is to prevent buckling of individual truss web and/or chord members only. Additional temporary and permanent bracing is always required for stability and to prevent collapse with possible personal injury and property damage. For general guidance regarding the fabrication, storage, delivery, erection and bracing of trusses and truss systems, see ***ANSI/TPI1 Quality Criteria, DSB-89 and BCSI Building Component Safety Information*** available from Truss Plate Institute, 218 N. Lee Street, Suite 312, Alexandria, VA 22314.

MiTek USA, Inc.
400 Sunrise Avenue, Suite 270
Roseville, CA 95661

LOAD CASE(S) Standard

1) Dead + Snow (balanced): Lumber Increase=1.15, Plate Increase=1.15
   Uniform Loads (plf)
   Vert: 1-4=-88, 4-5=-88, 1-6=-20
   Concentrated Loads (lb)
   Vert: 8=-30(F=-15, B=-15) 7=8(F=4, B=4) 3=-53(F=-27, B=-27) 13=146(F=73, B=73) 14=-604(F=-302, B=-302)

WARNING - Verify design parameters and READ NOTES ON THIS AND INCLUDED MITEK REFERENCE PAGE MII-7473 rev. 10/03/2015 BEFORE USE.
Design valid for use only with MiTek® connectors. This design is based only upon parameters shown, and is for an individual building component, not a truss system. Before use, the building designer must verify the applicability of design parameters and properly incorporate this design into the overall building design. Bracing indicated is to prevent buckling of individual truss web and/or chord members only. Additional temporary and permanent bracing is always required for stability and to prevent collapse with possible personal injury and property damage. For general guidance regarding the fabrication, storage, delivery, erection and bracing of trusses and truss systems, see ***ANSI/TPI1 Quality Criteria, DSB-89 and BCSI Building Component Safety Information*** available from Truss Plate Institute, 218 N. Lee Street, Suite 312, Alexandria, VA 22314.

MiTek USA, Inc.
400 Sunrise Avenue, Suite 270
Roseville, CA 95661

Job	Truss	Truss Type	Qty	Ply	ESPINOZA R60548632
J19-319	CR02	Diagonal Hip Girder	1	1	Job Reference (optional)

Stockton Truss, STOCKTON, CA 95215 8.330 s Dec 5 2019 MiTek Industries, Inc. Tue Dec 10 11:43:18 2019 Page 1
ID:eURouH3h5RzkGDllLuCRE8yWpf_-u?laHeL4Xvi7PMP1Y3cX?lveonLMq7DXLBr?sKyANb7

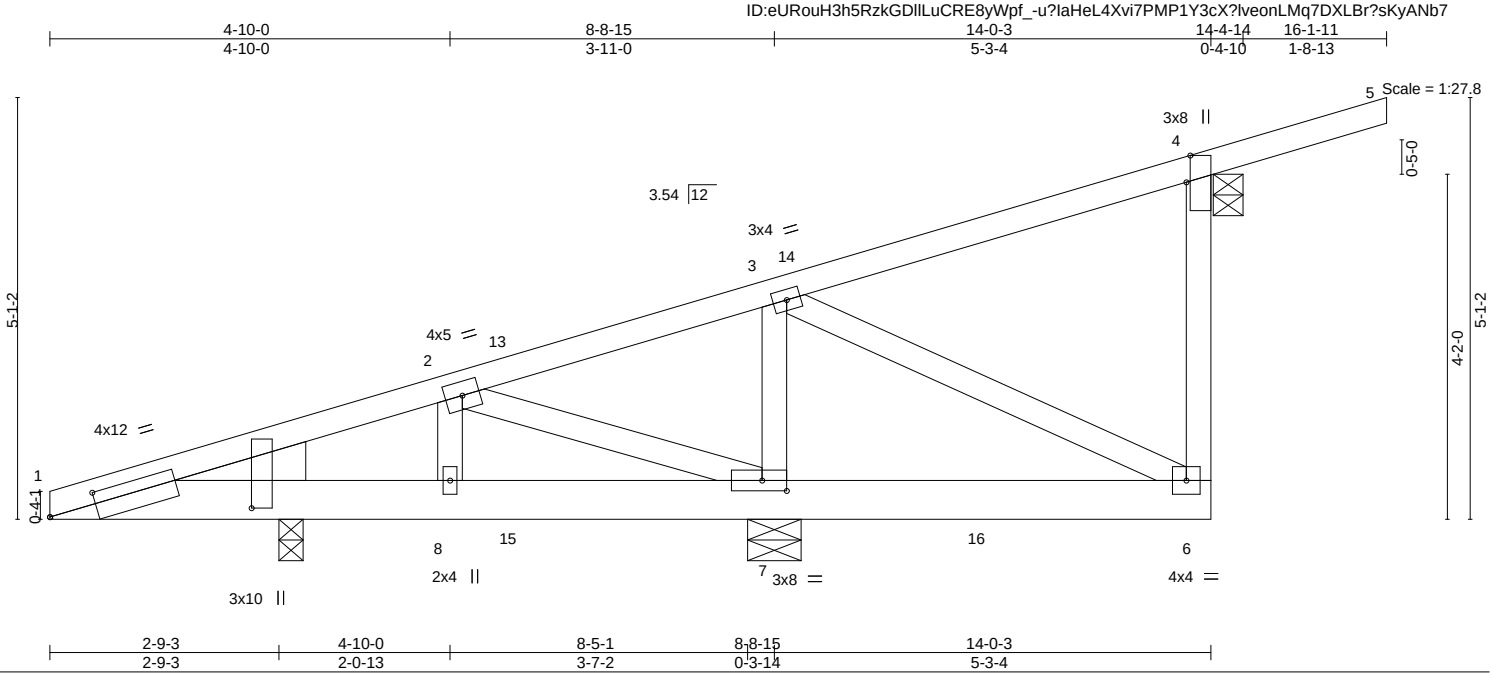

Plate Offsets (X,Y)-- [1:0-1-5,2-5-3], [1:0-6-14,0-1-11], [4:0-3-14,Edge], [7:0-3-9,0-1-8]

LOADING (psf)		SPACING-	2-0-0	CSI.		DEFL.	in	(loc)	l/defl	L/d	PLATES	GRIP
TCLL	30.0	Plate Grip DOL	1.15	TC	0.87	Vert(LL)	-0.09	1	>999	240	MT20	220/195
(Roof Snow=30.0)		Lumber DOL	1.15	BC	0.72	Vert(CT)	-0.25	1	>424	180		
TCDL	14.0	Rep Stress Incr	NO	WB	0.70	Horz(CT)	0.03	1	n/a	n/a		
BCLL	0.0 *	Code	IBC2015/TPI2014	Matrix-MSH		Wind(LL)	0.07	1	>999	360	Weight: 79 lb	FT = 20%
BCDL	10.0											

LUMBER-
TOP CHORD 2x4 DF No.1&Btr G
BOT CHORD 2x6 DF SS G
WEBS 2x4 DF Std G
WEDGE
Left: 2x6 DF SS -G

BRACING-
TOP CHORD Structural wood sheathing directly applied or 6-0-0 oc purlins, except end verticals.
BOT CHORD Rigid ceiling directly applied or 4-7-12 oc bracing.

REACTIONS. (lb/size) 4=328/0-4-5, 7=1002/0-7-12, 1=2068/0-3-8
Max Horz 7=121(LC 6)
Max Uplift 4=-137(LC 8), 7=-132(LC 6), 1=-349(LC 6)
Max Grav 4=489(LC 17), 7=1044(LC 17), 1=2068(LC 1)

FORCES. (lb) - Max. Comp./Max. Ten. - All forces 250 (lb) or less except when shown.
TOP CHORD 1-2=-449/2033, 2-3=-138/602, 4-6=-258/0
BOT CHORD 1-8=-1996/469, 7-8=-1996/469, 6-7=-516/55
WEBS 2-8=-963/177, 2-7=-310/1581, 3-7=-1017/108, 3-6=-66/578

NOTES-
1) Wind: ASCE 7-10; Vult=110mph (3-second gust) Vasd=87mph; TCDL=7.2psf; BCDL=4.2psf; h=25ft; Cat. II; Exp C; Enclosed; MWFRS (envelope); cantilever left and right exposed ; porch left and right exposed; Lumber DOL=1.33 plate grip DOL=1.33
2) TCLL: ASCE 7-10; Pf=30.0 psf (flat roof snow); Category II; Exp C; Partially Exp.; Ct=1.00
3) Unbalanced snow loads have been considered for this design.
4) This truss has been designed for greater of min roof live load of 20.0 psf or 1.00 times flat roof load of 30.0 psf on overhangs non-concurrent with other live loads.
5) This truss has been designed for a 10.0 psf bottom chord live load nonconcurrent with any other live loads.
6) * This truss has been designed for a live load of 20.0psf on the bottom chord in all areas where a rectangle 3-6-0 tall by 2-0-0 wide will fit between the bottom chord and any other members.
7) A plate rating reduction of 20% has been applied for the green lumber members.
8) Provide mechanical connection (by others) of truss to bearing plate capable of withstanding 100 lb uplift at joint(s) except (jt=lb) 4=137, 7=132, 1=349.
9) Beveled plate or shim required to provide full bearing surface with truss chord at joint(s) 4.
10) Gap between inside of top chord bearing and first diagonal or vertical web shall not exceed 0.500in.
11) Hanger(s) or other connection device(s) shall be provided sufficient to support concentrated load(s) 18 lb down and 10 lb up at 2-9-8, 18 lb down and 10 lb up at 2-9-8, 78 lb down and 20 lb up at 5-7-7, 78 lb down and 20 lb up at 5-7-7, and 175 lb down and 38 lb up at 8-5-6, and 1050 lb down and 204 lb up at 0-0-0 on top chord, and 15 lb down at 2-9-8, 15 lb down at 2-9-8, 40 lb down at 5-7-7, 40 lb down at 5-7-7, 71 lb down at 8-5-6, and 302 lb down and 61 lb up at 11-3-5, and 15 lb down and 79 lb up at 11-3-5 on bottom chord. The design/selection of such connection device(s) is the responsibility of others.
12) This truss is designed for a creep factor of 3.01, which is used to calculate the Vert(CT) deflection per ANSI/TPI 1.
13) In the LOAD CASE(S) section, loads applied to the face of the truss are noted as front (F) or back (B).

LOAD CASE(S) Standard

December 11,2019

Continued on page 2

WARNING - Verify design parameters and READ NOTES ON THIS AND INCLUDED MITEK REFERENCE PAGE MII-7473 rev. 10/03/2015 BEFORE USE.
Design valid for use only with MiTek® connectors. This design is based only upon parameters shown, and is for an individual building component, not a truss system. Before use, the building designer must verify the applicability of design parameters and properly incorporate this design into the overall building design. Bracing indicated is to prevent buckling of individual truss web and/or chord members only. Additional temporary and permanent bracing is always required for stability and to prevent collapse with possible personal injury and property damage. For general guidance regarding the fabrication, storage, delivery, erection and bracing of trusses and truss systems, see ***ANSI/TPI1 Quality Criteria, DSB-89 and BCSI Building Component Safety Information*** available from Truss Plate Institute, 218 N. Lee Street, Suite 312, Alexandria, VA 22314.

MiTek USA, Inc.
400 Sunrise Avenue, Suite 270
Roseville, CA 95661

LOAD CASE(S) Standard

1) Dead + Snow (balanced): Lumber Increase=1.15, Plate Increase=1.15
   Uniform Loads (plf)
   Vert: 1-4=-88, 4-5=-88, 1-6=-20
   Concentrated Loads (lb)
   Vert: 7=-71(B) 3=-115(B) 1=-1050(F) 10=-30(F=-15, B=-15) 13=-37(F=-19, B=-19) 15=-81(F=-40, B=-40) 16=-317(F=-302, B=-15)

WARNING - Verify design parameters and READ NOTES ON THIS AND INCLUDED MITEK REFERENCE PAGE MII-7473 rev. 10/03/2015 BEFORE USE.
Design valid for use only with MiTek® connectors. This design is based only upon parameters shown, and is for an individual building component, not a truss system. Before use, the building designer must verify the applicability of design parameters and properly incorporate this design into the overall building design. Bracing indicated is to prevent buckling of individual truss web and/or chord members only. Additional temporary and permanent bracing is always required for stability and to prevent collapse with possible personal injury and property damage. For general guidance regarding the fabrication, storage, delivery, erection and bracing of trusses and truss systems, see ***ANSI/TPI1 Quality Criteria, DSB-89 and BCSI Building Component Safety Information*** available from Truss Plate Institute, 218 N. Lee Street, Suite 312, Alexandria, VA 22314.

MiTek USA, Inc.
400 Sunrise Avenue, Suite 270
Roseville, CA 95661

Job	Truss	Truss Type	Qty	Ply	ESPINOZA R60548633
J19-319	CR03	Diagonal Hip Girder	1	1	Job Reference (optional)

Stockton Truss, STOCKTON, CA 95215 8.330 s Dec 5 2019 MiTek Industries, Inc. Tue Dec 10 11:43:20 2019 Page 1
ID:eURouH3h5RzkGDllLuCRE8yWpf_-rNPKiKMK3XyregZPfUf?4A_1Ra52IxPppVK6wDyANb5

5-10-10	9-0-2	12-9-5	16-10-2	17-1-0	19-10-15	22-8-14	25-6-13	28-4-13	31-0-0
5-10-10	3-1-8	3-9-4	4-0-13	0-2-14	2-9-15	2-9-15	2-9-15	2-9-15	2-7-4

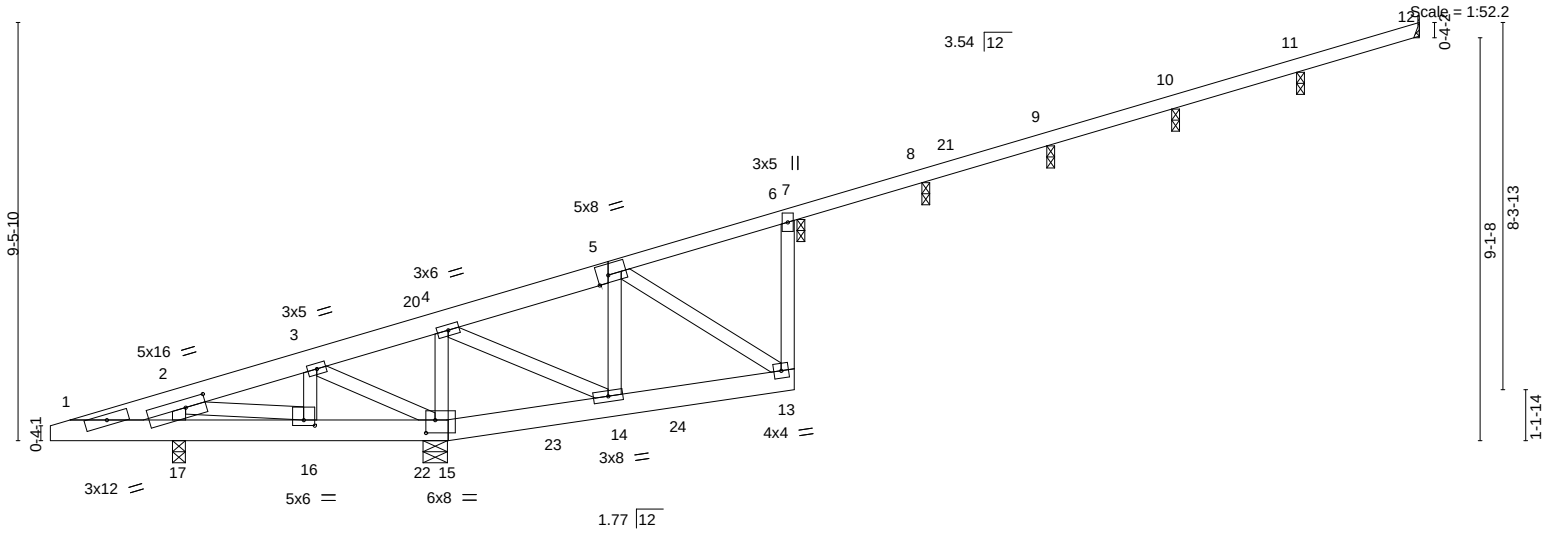

2-9-3	5-10-10	8-11-14	9-0-2	12-9-5	16-10-2	31-0-0
2-9-3	3-1-7	3-1-5	0-0-3	3-9-4	4-0-13	14-1-14

Plate Offsets (X,Y)-- [2:0-5-8,0-2-4], [5:0-3-0,0-2-0], [15:0-2-8,0-3-8], [16:0-3-0,0-1-8], [17:0-1-11,0-0-8]

LOADING (psf)		SPACING-	2-0-0	CSI.		DEFL.	in	(loc)	l/defl	L/d	PLATES	GRIP
TCLL	30.0	Plate Grip DOL	1.15	TC	0.67	Vert(LL)	-0.02	13-14	>999	240	MT20	220/195
(Roof Snow=30.0)		Lumber DOL	1.15	BC	0.45	Vert(CT)	-0.03	13-14	>999	180		
TCDL	14.0	Rep Stress Incr	NO	WB	0.97	Horz(CT)	0.02	17	n/a	n/a		
BCLL	0.0 *	Code	IBC2015/TPI2014	Matrix-MSH		Wind(LL)	0.01	13-14	>999	360	Weight: 124 lb	FT = 20%
BCDL	10.0											

LUMBER-
TOP CHORD 2x4 DF No.1&Btr G *Except* 1-5: 2x6 DF SS G
BOT CHORD 2x6 DF SS G
WEBS 2x4 DF Std G

BRACING-
TOP CHORD Structural wood sheathing directly applied or 6-0-0 oc purlins, except end verticals.
BOT CHORD Rigid ceiling directly applied or 3-11-14 oc bracing.

REACTIONS. All bearings 0-2-2 except (jt=length) 12=Mechanical, 15=0-6-10, 17=0-3-8.
(lb) - Max Horz 15=235(LC 10)
Max Uplift All uplift 100 lb or less at joint(s) 12, 8, 9, 10, 11 except 15=-337(LC 14), 17=-415(LC 6), 7=-262(LC 10)
Max Grav All reactions 250 lb or less at joint(s) 12, 8 except 15=1515(LC 1), 17=2538(LC 1), 7=637(LC 1), 9=373(LC 17), 10=376(LC 17), 11=363(LC 17)

FORCES. (lb) - Max. Comp./Max. Ten. - All forces 250 (lb) or less except when shown.
TOP CHORD 1-2=-784/3875, 2-3=-478/1555, 3-4=-273/810, 4-5=-448/72, 6-13=-234/373
BOT CHORD 1-17=-3642/752, 16-17=-3642/752, 15-16=-1519/493, 14-15=-791/90, 13-14=-140/398
WEBS 2-17=-1803/275, 2-16=-307/2207, 4-15=-1426/176, 4-14=-208/1266, 5-14=-333/158, 5-13=-404/149, 3-16=-758/156, 3-15=-355/1180

NOTES-
1) Wind: ASCE 7-10; Vult=110mph (3-second gust) Vasd=87mph; TCDL=7.2psf; BCDL=4.2psf; h=25ft; Cat. II; Exp C; Enclosed; MWFRS (envelope); cantilever left and right exposed ; porch left and right exposed; Lumber DOL=1.33 plate grip DOL=1.33
2) TCLL: ASCE 7-10; Pf=30.0 psf (flat roof snow); Category II; Exp C; Partially Exp.; Ct=1.00
3) Unbalanced snow loads have been considered for this design.
4) This truss has been designed for a 10.0 psf bottom chord live load nonconcurrent with any other live loads.
5) * This truss has been designed for a live load of 20.0psf on the bottom chord in all areas where a rectangle 3-6-0 tall by 2-0-0 wide will fit between the bottom chord and any other members.
6) A plate rating reduction of 20% has been applied for the green lumber members.
7) Refer to girder(s) for truss to truss connections.
8) Provide mechanical connection (by others) of truss to bearing plate at joint(s) 7, 8, 9, 10, 11.
9) Provide mechanical connection (by others) of truss to bearing plate capable of withstanding 100 lb uplift at joint(s) 12, 8, 9, 10, 11 except (jt=lb) 15=337, 17=415, 7=262.
10) Beveled plate or shim required to provide full bearing surface with truss chord at joint(s) 7, 8, 9, 10, 11.
11) Hanger(s) or other connection device(s) shall be provided sufficient to support concentrated load(s) 44 lb down and 10 lb up at 2-9-8, 44 lb down and 10 lb up at 2-9-8, 103 lb down and 20 lb up at 5-7-7, 103 lb down and 20 lb up at 5-7-7, 200 lb down and 38 lb up at 8-5-6, 200 lb down and 38 lb up at 8-5-6, 24 lb down and 182 lb up at 19-9-2, 78 lb down and 20 lb up at 22-7-1, 82 lb down and 20 lb up at 25-5-0, and 85 lb down and 20 lb up at 28-3-0, and 108 lb down and 27 lb up at 30-11-4 on top chord, and 1500 lb down and 291 lb up at 0-1-12, 15 lb down and 19 lb up at 2-9-8, 15 lb down and 19 lb up at 2-9-8, 40 lb down and 35 lb up at 5-7-7, 40 lb down and 35 lb up at 5-7-7, 71 lb down and 52 lb up at 8-5-6, 71 lb down and 52 lb up at 8-5-6, 159 lb down and 64 lb up at 11-3-5, 257 lb down and 85 lb up at 11-3-5, 150 lb down and 61 lb up at 14-1-4, and 212 lb down and 75 lb up at 14-1-4, and 140 lb up at 16-8-6 on bottom chord. The design/selection of such connection device(s) is the responsibility of others.
12) This truss is designed for a creep factor of 3.01, which is used to calculate the Vert(CT) deflection per ANSI/TPI 1.

Continued on page 2

REGISTERED PROFESSIONAL ENGINEER
EDUARD TEODOSESCU
C 75435
EXP. 03/31/2020
STATE OF CALIFORNIA

December 11,2019

WARNING - Verify design parameters and READ NOTES ON THIS AND INCLUDED MITEK REFERENCE PAGE MII-7473 rev. 10/03/2015 BEFORE USE.
Design valid for use only with MiTek® connectors. This design is based only upon parameters shown, and is for an individual building component, not a truss system. Before use, the building designer must verify the applicability of design parameters and properly incorporate this design into the overall building design. Bracing indicated is to prevent buckling of individual truss web and/or chord members only. Additional temporary and permanent bracing is always required for stability and to prevent collapse with possible personal injury and property damage. For general guidance regarding the fabrication, storage, delivery, erection and bracing of trusses and truss systems, see ***ANSI/TPI1 Quality Criteria, DSB-89 and BCSI Building Component Safety Information*** available from Truss Plate Institute, 218 N. Lee Street, Suite 312, Alexandria, VA 22314.

MiTek USA, Inc.
400 Sunrise Avenue, Suite 270
Roseville, CA 95661

NOTES-

13) In the LOAD CASE(S) section, loads applied to the face of the truss are noted as front (F) or back (B).

LOAD CASE(S) Standard

1) Dead + Snow (balanced): Lumber Increase=1.15, Plate Increase=1.15
   Uniform Loads (plf)
   Vert: 1-6=-88, 6-12=-88, 1-15=-20, 13-15=-20
   Concentrated Loads (lb)
   Vert: 12=-70(B) 13=11(B) 1=-1500(F) 17=-30(F=-15, B=-15) 16=-81(F=-40, B=-40) 3=-37(F=-19, B=-19) 8=53(B) 11=-0(B) 20=-231(F=-115, B=-115) 22=-142(F=-71, B=-71) 23=-416(F=-257, B=-159) 24=-362(F=-212, B=-150)

WARNING - Verify design parameters and READ NOTES ON THIS AND INCLUDED MITEK REFERENCE PAGE MII-7473 rev. 10/03/2015 BEFORE USE.
Design valid for use only with MiTek® connectors. This design is based only upon parameters shown, and is for an individual building component, not a truss system. Before use, the building designer must verify the applicability of design parameters and properly incorporate this design into the overall building design. Bracing indicated is to prevent buckling of individual truss web and/or chord members only. Additional temporary and permanent bracing is always required for stability and to prevent collapse with possible personal injury and property damage. For general guidance regarding the fabrication, storage, delivery, erection and bracing of trusses and truss systems, see ***ANSI/TPI1 Quality Criteria, DSB-89 and BCSI Building Component Safety Information*** available from Truss Plate Institute, 218 N. Lee Street, Suite 312, Alexandria, VA 22314.

MiTek USA, Inc.
400 Sunrise Avenue, Suite 270
Roseville, CA 95661

Job	Truss	Truss Type	Qty	Ply	ESPINOZA R60548634
J19-319	CR04	Diagonal Hip Girder	1	1	Job Reference (optional)

Stockton Truss, STOCKTON, CA 95215 8.330 s Dec 5 2019 MiTek Industries, Inc. Tue Dec 10 11:43:21 2019 Page 1
ID:eURouH3h5RzkGDllLuCRE8yWpf_-JazjvgNyqq5iGq8cDBAEdNXEV_XN1c4z184gSfyANb4

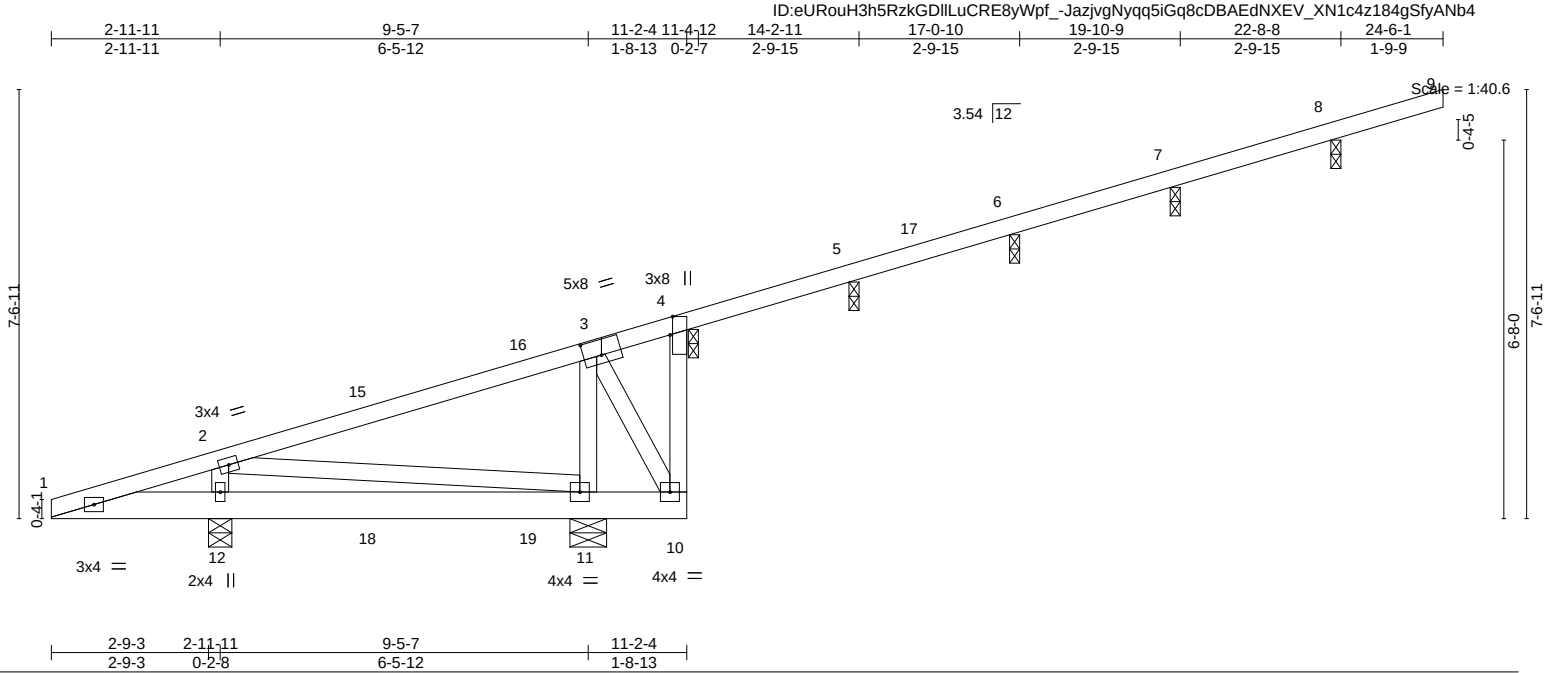

Plate Offsets (X,Y)-- [3:0-3-12,0-3-4], [4:0-3-14,Edge]

LOADING (psf)		SPACING-	2-0-0	CSI.		DEFL.	in	(loc)	l/defl	L/d	PLATES	GRIP
TCLL	30.0	Plate Grip DOL	1.15	TC	0.52	Vert(LL)	-0.01	11-12	>999	240	MT20	220/195
(Roof Snow=30.0)		Lumber DOL	1.15	BC	0.13	Vert(CT)	0.02	11-12	>999	180		
TCDL	14.0	Rep Stress Incr	NO	WB	0.12	Horz(CT)	-0.01	4	n/a	n/a		
BCLL	0.0 *	Code	IBC2015/TPI2014	Matrix-MSH		Wind(LL)	0.01	11-12	>999	360	Weight: 80 lb	FT = 20%
BCDL	10.0											

LUMBER-
TOP CHORD 2x4 DF No.1&Btr G
BOT CHORD 2x6 DF SS G
WEBS 2x4 DF Std G

BRACING-
TOP CHORD Structural wood sheathing directly applied or 6-0-0 oc purlins, except end verticals.
BOT CHORD Rigid ceiling directly applied or 6-0-0 oc bracing.

REACTIONS. All bearings 0-2-2 except (jt=length) 12=0-4-15, 11=0-7-12.
(lb) - Max Horz 12=186(LC 6)
Max Uplift All uplift 100 lb or less at joint(s) 4, 5, 6, 7, 8 except 12=-154(LC 6), 11=-148(LC 6)
Max Grav All reactions 250 lb or less at joint(s) 4 except 12=663(LC 1), 11=503(LC 17), 5=290(LC 17), 6=351(LC 17), 7=256(LC 17), 8=564(LC 17)

FORCES. (lb) - Max. Comp./Max. Ten. - All forces 250 (lb) or less except when shown.
TOP CHORD 1-2=0/392
BOT CHORD 1-12=-305/0, 11-12=-351/0
WEBS 2-12=-727/24, 2-11=0/302, 3-11=-542/0

NOTES-
1) Wind: ASCE 7-10; Vult=110mph (3-second gust) Vasd=87mph; TCDL=7.2psf; BCDL=4.2psf; h=25ft; Cat. II; Exp C; Enclosed; MWFRS (envelope); cantilever left and right exposed ; porch left and right exposed; Lumber DOL=1.33 plate grip DOL=1.33
2) TCLL: ASCE 7-10; Pf=30.0 psf (flat roof snow); Category II; Exp C; Partially Exp.; Ct=1.00
3) Unbalanced snow loads have been considered for this design.
4) This truss has been designed for greater of min roof live load of 20.0 psf or 1.00 times flat roof load of 30.0 psf on overhangs non-concurrent with other live loads.
5) This truss has been designed for a 10.0 psf bottom chord live load nonconcurrent with any other live loads.
6) * This truss has been designed for a live load of 20.0psf on the bottom chord in all areas where a rectangle 3-6-0 tall by 2-0-0 wide will fit between the bottom chord and any other members.
7) A plate rating reduction of 20% has been applied for the green lumber members.
8) Provide mechanical connection (by others) of truss to bearing plate at joint(s) 4, 5, 6, 7, 8.
9) Provide mechanical connection (by others) of truss to bearing plate capable of withstanding 100 lb uplift at joint(s) 4, 5, 6, 7, 8 except (jt=lb) 12=154, 11=148.
10) Beveled plate or shim required to provide full bearing surface with truss chord at joint(s) 4, 5, 6, 7, 8.
11) Gap between inside of top chord bearing and first diagonal or vertical web shall not exceed 0.500in.
12) Hanger(s) or other connection device(s) shall be provided sufficient to support concentrated load(s) 18 lb down and 10 lb up at 2-9-8, 18 lb down and 10 lb up at 2-9-8, 15 lb down and 11 lb up at 5-7-7, 15 lb down and 11 lb up at 5-7-7, 86 lb down and 37 lb up at 8-5-6, 86 lb down and 37 lb up at 8-5-6, 74 lb down and 25 lb up at 14-1-4, 66 lb down and 23 lb up at 16-11-3, 69 lb down and 23 lb up at 19-9-2, and 72 lb down and 21 lb up at 22-7-1, and 62 lb down and 15 lb up at 24-6-1 on top chord, and 15 lb down at 2-9-8, 15 lb down at 2-9-8, 114 lb up at 5-7-7, 114 lb up at 5-7-7, and 16 lb up at 8-5-6, and 16 lb up at 8-5-6 on bottom chord. The design/selection of such connection device(s) is the responsibility of others.
13) This truss is designed for a creep factor of 3.01, which is used to calculate the Vert(CT) deflection per ANSI/TPI 1.
14) In the LOAD CASE(S) section, loads applied to the face of the truss are noted as front (F) or back (B).

December 11,2019

LOAD CASE(S) Standard

Continued on page 2

WARNING - Verify design parameters and READ NOTES ON THIS AND INCLUDED MITEK REFERENCE PAGE MII-7473 rev. 10/03/2015 BEFORE USE.
Design valid for use only with MiTek® connectors. This design is based only upon parameters shown, and is for an individual building component, not a truss system. Before use, the building designer must verify the applicability of design parameters and properly incorporate this design into the overall building design. Bracing indicated is to prevent buckling of individual truss web and/or chord members only. Additional temporary and permanent bracing is always required for stability and to prevent collapse with possible personal injury and property damage. For general guidance regarding the fabrication, storage, delivery, erection and bracing of trusses and truss systems, see ***ANSI/TPI1 Quality Criteria, DSB-89 and BCSI Building Component Safety Information*** available from Truss Plate Institute, 218 N. Lee Street, Suite 312, Alexandria, VA 22314.

MiTek USA, Inc.
400 Sunrise Avenue, Suite 270
Roseville, CA 95661

LOAD CASE(S) Standard

1) Dead + Snow (balanced): Lumber Increase=1.15, Plate Increase=1.15
   Uniform Loads (plf)
   Vert: 1-4=-88, 4-9=-88, 1-10=-20
   Concentrated Loads (lb)
   Vert: 9=-49(B) 12=-30(F=-15, B=-15) 5=-14(B) 6=-27(B) 7=-30(B) 8=-33(B) 16=-53(F=-27, B=-27) 18=146(F=73, B=73) 19=8(F=4, B=4)

WARNING - Verify design parameters and READ NOTES ON THIS AND INCLUDED MITEK REFERENCE PAGE MII-7473 rev. 10/03/2015 BEFORE USE.
Design valid for use only with MiTek® connectors. This design is based only upon parameters shown, and is for an individual building component, not a truss system. Before use, the building designer must verify the applicability of design parameters and properly incorporate this design into the overall building design. Bracing indicated is to prevent buckling of individual truss web and/or chord members only. Additional temporary and permanent bracing is always required for stability and to prevent collapse with possible personal injury and property damage. For general guidance regarding the fabrication, storage, delivery, erection and bracing of trusses and truss systems, see ***ANSI/TPI1 Quality Criteria, DSB-89 and BCSI Building Component Safety Information*** available from Truss Plate Institute, 218 N. Lee Street, Suite 312, Alexandria, VA 22314.

MiTek USA, Inc.
400 Sunrise Avenue, Suite 270
Roseville, CA 95661

Job	Truss	Truss Type	Qty	Ply	ESPINOZA R60548635
J19-319	CR05	Diagonal Hip Girder	2	1	Job Reference (optional)

Stockton Truss, STOCKTON, CA 95215 8.330 s Dec 5 2019 MiTek Industries, Inc. Tue Dec 10 11:43:22 2019 Page 1
ID:eURouH3h5RzkGDllLuCRE8yWpf_-nmX560Oaa8DYu_jonuhT9b4TLOtRm0n6GopD?5yANb3

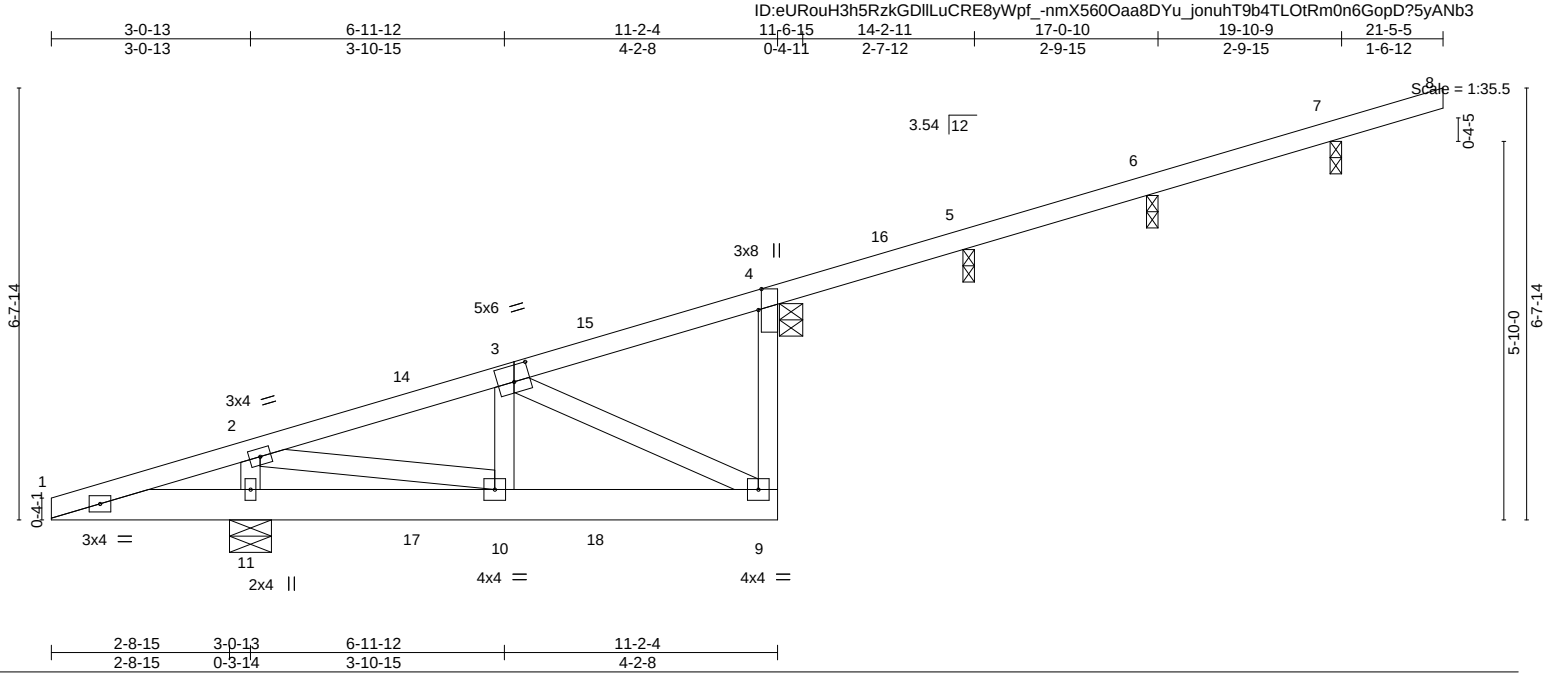

Plate Offsets (X,Y)-- [3:0-3-0,0-3-0], [4:0-3-14,Edge]

LOADING (psf)		SPACING-	2-0-0	CSI.		DEFL.	in	(loc)	l/defl	L/d	PLATES	GRIP
TCLL	30.0	Plate Grip DOL	1.15	TC	0.26	Vert(LL)	-0.01	10	>999	240	MT20	220/195
(Roof Snow=30.0)		Lumber DOL	1.15	BC	0.07	Vert(CT)	-0.02	9-10	>999	180		
TCDL	14.0	Rep Stress Incr	NO	WB	0.28	Horz(CT)	-0.01	5	n/a	n/a		
BCLL	0.0 *	Code	IBC2015/TPI2014	Matrix-MSH		Wind(LL)	0.01	9-10	>999	360	Weight: 73 lb	FT = 20%
BCDL	10.0											

LUMBER-
TOP CHORD 2x4 DF No.1&Btr G
BOT CHORD 2x6 DF SS G
WEBS 2x4 DF Std G

BRACING-
TOP CHORD Structural wood sheathing directly applied or 6-0-0 oc purlins, except end verticals.
BOT CHORD Rigid ceiling directly applied or 6-0-0 oc bracing.

REACTIONS. All bearings 0-2-2 except (jt=length) 4=0-4-5, 11=0-7-12.
(lb) - Max Horz 11=162(LC 6)
Max Uplift All uplift 100 lb or less at joint(s) 5, 6, 7 except 4=-173(LC 6), 11=-197(LC 6)
Max Grav All reactions 250 lb or less at joint(s) except 4=494(LC 17), 11=771(LC 1), 5=306(LC 17), 6=292(LC 17), 7=442(LC 17)

FORCES. (lb) - Max. Comp./Max. Ten. - All forces 250 (lb) or less except when shown.
TOP CHORD 1-2=-38/414, 2-3=-316/138
BOT CHORD 1-11=-359/51, 10-11=-384/0, 9-10=-214/274
WEBS 2-11=-624/95, 2-10=-107/631, 3-10=-272/0, 3-9=-306/241

NOTES-
1) Wind: ASCE 7-10; Vult=110mph (3-second gust) Vasd=87mph; TCDL=7.2psf; BCDL=4.2psf; h=25ft; Cat. II; Exp C; Enclosed; MWFRS (envelope); cantilever left and right exposed ; porch left and right exposed; Lumber DOL=1.33 plate grip DOL=1.33
2) TCLL: ASCE 7-10; Pf=30.0 psf (flat roof snow); Category II; Exp C; Partially Exp.; Ct=1.00
3) Unbalanced snow loads have been considered for this design.
4) This truss has been designed for greater of min roof live load of 20.0 psf or 1.00 times flat roof load of 30.0 psf on overhangs non-concurrent with other live loads.
5) This truss has been designed for a 10.0 psf bottom chord live load nonconcurrent with any other live loads.
6) * This truss has been designed for a live load of 20.0psf on the bottom chord in all areas where a rectangle 3-6-0 tall by 2-0-0 wide will fit between the bottom chord and any other members.
7) A plate rating reduction of 20% has been applied for the green lumber members.
8) Provide mechanical connection (by others) of truss to bearing plate at joint(s) 5, 6, 7.
9) Provide mechanical connection (by others) of truss to bearing plate capable of withstanding 100 lb uplift at joint(s) 5, 6, 7 except (jt=lb) 4=173, 11=197.
10) Beveled plate or shim required to provide full bearing surface with truss chord at joint(s) 4, 5, 6, 7.
11) Gap between inside of top chord bearing and first diagonal or vertical web shall not exceed 0.500in.
12) Hanger(s) or other connection device(s) shall be provided sufficient to support concentrated load(s) 18 lb down and 10 lb up at 2-9-8, 18 lb down and 10 lb up at 2-9-8, 15 lb down and 11 lb up at 5-7-7, 15 lb down and 11 lb up at 5-7-7, 86 lb down and 37 lb up at 8-5-6, 86 lb down and 37 lb up at 8-5-6, 110 lb up at 14-1-4, and 66 lb down and 23 lb up at 16-11-3, and 69 lb down and 21 lb up at 19-9-2 on top chord, and 15 lb down at 2-9-8, 15 lb down at 2-9-8, 114 lb up at 5-7-7, 114 lb up at 5-7-7, and 16 lb up at 8-5-6, and 16 lb up at 8-5-6 on bottom chord. The design/selection of such connection device(s) is the responsibility of others.
13) This truss is designed for a creep factor of 3.01, which is used to calculate the Vert(CT) deflection per ANSI/TPI 1.
14) In the LOAD CASE(S) section, loads applied to the face of the truss are noted as front (F) or back (B).

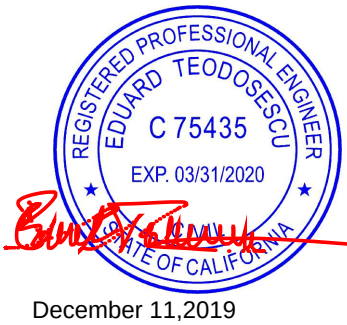

December 11,2019

LOAD CASE(S) Standard

Continued on page 2

WARNING - Verify design parameters and READ NOTES ON THIS AND INCLUDED MITEK REFERENCE PAGE MII-7473 rev. 10/03/2015 BEFORE USE.
Design valid for use only with MiTek® connectors. This design is based only upon parameters shown, and is for an individual building component, not a truss system. Before use, the building designer must verify the applicability of design parameters and properly incorporate this design into the overall building design. Bracing indicated is to prevent buckling of individual truss web and/or chord members only. Additional temporary and permanent bracing is always required for stability and to prevent collapse with possible personal injury and property damage. For general guidance regarding the fabrication, storage, delivery, erection and bracing of trusses and truss systems, see ***ANSI/TPI1 Quality Criteria, DSB-89 and BCSI Building Component Safety Information*** available from Truss Plate Institute, 218 N. Lee Street, Suite 312, Alexandria, VA 22314.

MiTek USA, Inc.
400 Sunrise Avenue, Suite 270
Roseville, CA 95661

LOAD CASE(S) Standard

1) Dead + Snow (balanced): Lumber Increase=1.15, Plate Increase=1.15
   Uniform Loads (plf)
   Vert: 1-4=-88, 4-8=-88, 1-9=-20
   Concentrated Loads (lb)
   Vert: 11=-30(F=-15, B=-15) 5=41(B) 6=-27(B) 7=-30(B) 15=-53(F=-27, B=-27) 17=146(F=73, B=73) 18=8(F=4, B=4)

WARNING - Verify design parameters and READ NOTES ON THIS AND INCLUDED MITEK REFERENCE PAGE MII-7473 rev. 10/03/2015 BEFORE USE.
Design valid for use only with MiTek® connectors. This design is based only upon parameters shown, and is for an individual building component, not a truss system. Before use, the building designer must verify the applicability of design parameters and properly incorporate this design into the overall building design. Bracing indicated is to prevent buckling of individual truss web and/or chord members only. Additional temporary and permanent bracing is always required for stability and to prevent collapse with possible personal injury and property damage. For general guidance regarding the fabrication, storage, delivery, erection and bracing of trusses and truss systems, see ***ANSI/TPI1 Quality Criteria, DSB-89 and BCSI Building Component Safety Information*** available from Truss Plate Institute, 218 N. Lee Street, Suite 312, Alexandria, VA 22314.

MiTek USA, Inc.
400 Sunrise Avenue, Suite 270
Roseville, CA 95661

Job	Truss	Truss Type	Qty	Ply	ESPINOZA R60548636
J19-319	CR06	Diagonal Hip Girder	1	1	Job Reference (optional)

Stockton Truss, STOCKTON, CA 95215 8.330 s Dec 5 2019 MiTek Industries, Inc. Tue Dec 10 11:43:24 2019 Page 1
ID:eURouH3h5RzkGDllLuCRE8yWpf_-j9frXhPr6lTG7HtAuJjxE09pVCYsEwBPj6lK3_yANb1

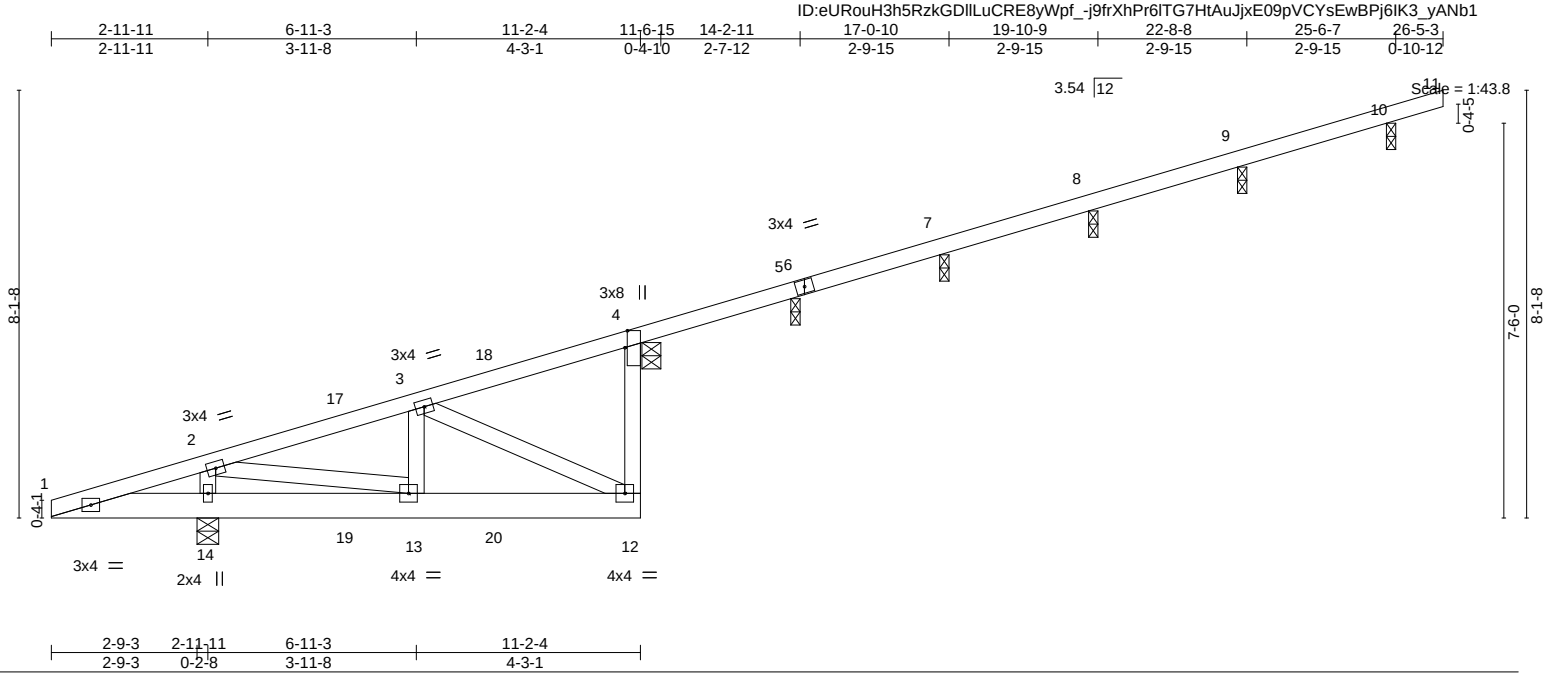

Plate Offsets (X,Y)-- [4:0-3-14,Edge]

LOADING (psf)		SPACING-	2-0-0	CSI.		DEFL.	in	(loc)	l/defl	L/d	PLATES	GRIP
TCLL	30.0	Plate Grip DOL	1.15	TC	0.28	Vert(LL)	-0.01	13	>999	240	MT20	220/195
(Roof Snow=30.0)		Lumber DOL	1.15	BC	0.08	Vert(CT)	-0.02	12-13	>999	180		
TCDL	14.0	Rep Stress Incr	NO	WB	0.28	Horz(CT)	-0.01	4	n/a	n/a		
BCLL	0.0 *	Code	IBC2015/TPI2014	Matrix-MSH		Wind(LL)	0.01	12-13	>999	360	Weight: 80 lb	FT = 20%
BCDL	10.0											

LUMBER-
TOP CHORD 2x4 DF No.1&Btr G
BOT CHORD 2x6 DF SS G
WEBS 2x4 DF Std G

BRACING-
TOP CHORD Structural wood sheathing directly applied or 6-0-0 oc purlins, except end verticals.
BOT CHORD Rigid ceiling directly applied or 6-0-0 oc bracing.

REACTIONS. All bearings 0-2-2 except (jt=length) 4=0-4-5, 14=0-4-15.
(lb) - Max Horz 14=202(LC 6)
Max Uplift All uplift 100 lb or less at joint(s) 5, 7, 8, 9, 10 except 4=-179(LC 6), 14=-179(LC 6)
Max Grav All reactions 250 lb or less at joint(s) 5 except 4=495(LC 1), 14=762(LC 1), 7=314(LC 17), 8=366(LC 17), 9=344(LC 17), 10=348(LC 17)

FORCES. (lb) - Max. Comp./Max. Ten. - All forces 250 (lb) or less except when shown.
TOP CHORD 1-2=-39/392, 2-3=-348/122
BOT CHORD 1-14=-339/52, 13-14=-380/0, 12-13=-235/291
WEBS 2-14=-607/80, 2-13=-87/644, 3-13=-273/0, 3-12=-320/260

NOTES-
1) Wind: ASCE 7-10; Vult=110mph (3-second gust) Vasd=87mph; TCDL=7.2psf; BCDL=4.2psf; h=25ft; Cat. II; Exp C; Enclosed; MWFRS (envelope); cantilever left and right exposed ; porch left and right exposed; Lumber DOL=1.33 plate grip DOL=1.33
2) TCLL: ASCE 7-10; Pf=30.0 psf (flat roof snow); Category II; Exp C; Partially Exp.; Ct=1.00
3) Unbalanced snow loads have been considered for this design.
4) This truss has been designed for greater of min roof live load of 20.0 psf or 1.00 times flat roof load of 30.0 psf on overhangs non-concurrent with other live loads.
5) This truss has been designed for a 10.0 psf bottom chord live load nonconcurrent with any other live loads.
6) * This truss has been designed for a live load of 20.0psf on the bottom chord in all areas where a rectangle 3-6-0 tall by 2-0-0 wide will fit between the bottom chord and any other members.
7) A plate rating reduction of 20% has been applied for the green lumber members.
8) Provide mechanical connection (by others) of truss to bearing plate at joint(s) 5, 7, 8, 9, 10.
9) Provide mechanical connection (by others) of truss to bearing plate capable of withstanding 100 lb uplift at joint(s) 5, 7, 8, 9, 10 except (jt=lb) 4=179, 14=179.
10) Beveled plate or shim required to provide full bearing surface with truss chord at joint(s) 4, 5, 7, 8, 9, 10.
11) Gap between inside of top chord bearing and first diagonal or vertical web shall not exceed 0.500in.
12) Hanger(s) or other connection device(s) shall be provided sufficient to support concentrated load(s) 18 lb down and 10 lb up at 2-9-8, 18 lb down and 10 lb up at 2-9-8, 15 lb down and 11 lb up at 5-7-7, 15 lb down and 11 lb up at 5-7-7, 86 lb down and 37 lb up at 8-5-6, 86 lb down and 37 lb up at 8-5-6, 110 lb up at 14-1-4, 66 lb down and 23 lb up at 16-11-3, 69 lb down and 23 lb up at 19-9-2, and 72 lb down and 23 lb up at 22-7-1, and 81 lb down and 22 lb up at 25-5-0 on top chord, and 15 lb down at 2-9-8, 15 lb down at 2-9-8, 114 lb up at 5-7-7, 114 lb up at 5-7-7, and 16 lb up at 8-5-6, and 16 lb up at 8-5-6 on bottom chord. The design/selection of such connection device(s) is the responsibility of others.
13) This truss is designed for a creep factor of 3.01, which is used to calculate the Vert(CT) deflection per ANSI/TPI 1.
14) In the LOAD CASE(S) section, loads applied to the face of the truss are noted as front (F) or back (B).

REGISTERED PROFESSIONAL ENGINEER EDUARD TEODOSESCU C 75435 EXP. 03/31/2020 STATE OF CALIFORNIA

December 11,2019

LOAD CASE(S) Standard

Continued on page 2

WARNING - Verify design parameters and READ NOTES ON THIS AND INCLUDED MITEK REFERENCE PAGE MII-7473 rev. 10/03/2015 BEFORE USE.
Design valid for use only with MiTek® connectors. This design is based only upon parameters shown, and is for an individual building component, not a truss system. Before use, the building designer must verify the applicability of design parameters and properly incorporate this design into the overall building design. Bracing indicated is to prevent buckling of individual truss web and/or chord members only. Additional temporary and permanent bracing is always required for stability and to prevent collapse with possible personal injury and property damage. For general guidance regarding the fabrication, storage, delivery, erection and bracing of trusses and truss systems, see ***ANSI/TPI1 Quality Criteria, DSB-89 and BCSI Building Component Safety Information*** available from Truss Plate Institute, 218 N. Lee Street, Suite 312, Alexandria, VA 22314.

MiTek USA, Inc.
400 Sunrise Avenue, Suite 270
Roseville, CA 95661

LOAD CASE(S) Standard

1) Dead + Snow (balanced): Lumber Increase=1.15, Plate Increase=1.15
   Uniform Loads (plf)
   Vert: 1-4=-88, 4-11=-88, 1-12=-20
   Concentrated Loads (lb)
   Vert: 14=-30(F=-15, B=-15) 5=41(B) 7=-27(B) 8=-30(B) 9=-33(B) 10=-47(B) 18=-53(F=-27, B=-27) 19=146(F=73, B=73) 20=8(F=4, B=4)

WARNING - Verify design parameters and READ NOTES ON THIS AND INCLUDED MITEK REFERENCE PAGE MII-7473 rev. 10/03/2015 BEFORE USE.
Design valid for use only with MiTek® connectors. This design is based only upon parameters shown, and is for an individual building component, not a truss system. Before use, the building designer must verify the applicability of design parameters and properly incorporate this design into the overall building design. Bracing indicated is to prevent buckling of individual truss web and/or chord members only. Additional temporary and permanent bracing is always required for stability and to prevent collapse with possible personal injury and property damage. For general guidance regarding the fabrication, storage, delivery, erection and bracing of trusses and truss systems, see ***ANSI/TPI1 Quality Criteria, DSB-89 and BCSI Building Component Safety Information*** available from Truss Plate Institute, 218 N. Lee Street, Suite 312, Alexandria, VA 22314.

MiTek USA, Inc.
400 Sunrise Avenue, Suite 270
Roseville, CA 95661

Job	Truss	Truss Type	Qty	Ply	ESPINOZA R60548637
J19-319	D01	Common Girder	1	1	Job Reference (optional)

Stockton Truss, STOCKTON, CA 95215 8.330 s Dec 5 2019 MiTek Industries, Inc. Tue Dec 10 11:43:25 2019 Page 1
ID:eURouH3h5RzkGDllLuCRE8yWpf_-BLDDl1QTt3b7lRSNS1EAnDivhbtgzQGZym2tcQyANb0

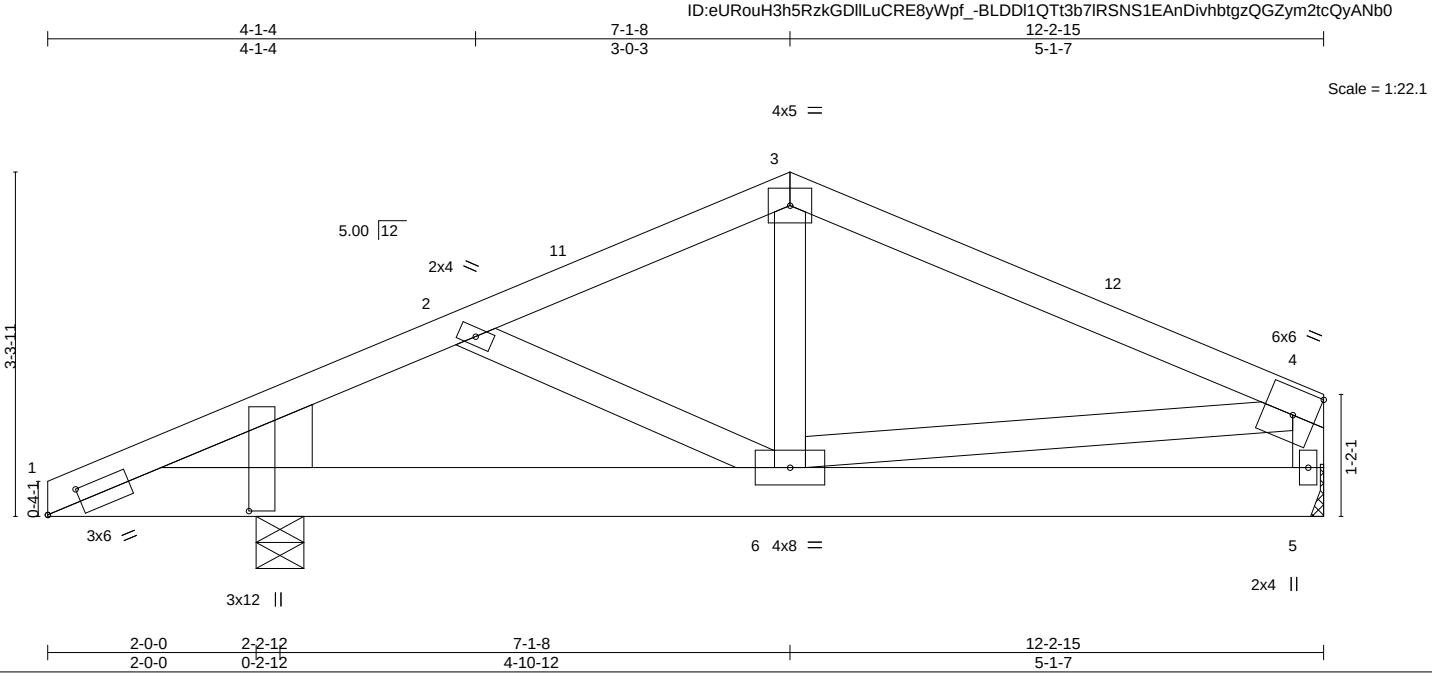

Plate Offsets (X,Y)-- [1:0-4-1,0-1-8], [1:0-0-7,1-11-3]

LOADING (psf)		SPACING-	2-0-0	CSI.		DEFL.	in	(loc)	l/defl	L/d	PLATES	GRIP
TCLL	30.0	Plate Grip DOL	1.15	TC	0.57	Vert(LL)	-0.01	1	>999	240	MT20	220/195
(Roof Snow=30.0)		Lumber DOL	1.15	BC	0.17	Vert(CT)	-0.03	5-6	>999	180		
TCDL	14.0	Rep Stress Incr	NO	WB	0.10	Horz(CT)	0.00	5	n/a	n/a		
BCLL	0.0 *	Code	IBC2015/TPI2014	Matrix-MSH		Wind(LL)	0.01	5-6	>999	360	Weight: 65 lb	FT = 20%
BCDL	10.0											

LUMBER-
TOP CHORD 2x4 DF No.1&Btr G
BOT CHORD 2x6 DF SS G
WEBS 2x4 DF Std G
WEDGE
Left: 2x8 DF SS

BRACING-
TOP CHORD Structural wood sheathing directly applied or 6-0-0 oc purlins, except end verticals.
BOT CHORD Rigid ceiling directly applied or 10-0-0 oc bracing.

REACTIONS. (lb/size) 5=506/Mechanical, 1=801/0-5-8
Max Horz 1=43(LC 10)
Max Uplift 5=-67(LC 6), 1=-105(LC 7)

FORCES. (lb) - Max. Comp./Max. Ten. - All forces 250 (lb) or less except when shown.
TOP CHORD 1-2=-499/68, 2-3=-478/89, 3-4=-540/85, 4-5=-438/43
BOT CHORD 1-6=-45/367

NOTES-
1) Wind: ASCE 7-10; Vult=110mph (3-second gust) Vasd=87mph; TCDL=7.2psf; BCDL=4.2psf; h=25ft; Cat. II; Exp C; Enclosed; MWFRS (envelope); cantilever left and right exposed ; porch left and right exposed; Lumber DOL=1.33 plate grip DOL=1.33
2) TCLL: ASCE 7-10; Pf=30.0 psf (flat roof snow); Category II; Exp C; Partially Exp.; Ct=1.00
3) Unbalanced snow loads have been considered for this design.
4) This truss has been designed for a 10.0 psf bottom chord live load nonconcurrent with any other live loads.
5) * This truss has been designed for a live load of 20.0psf on the bottom chord in all areas where a rectangle 3-6-0 tall by 2-0-0 wide will fit between the bottom chord and any other members.
6) A plate rating reduction of 20% has been applied for the green lumber members.
7) Refer to girder(s) for truss to truss connections.
8) Provide mechanical connection (by others) of truss to bearing plate capable of withstanding 100 lb uplift at joint(s) 5 except (jt=lb) 1=105.
9) Hanger(s) or other connection device(s) shall be provided sufficient to support concentrated load(s) 9 lb down at 7-1-8 on top chord. The design/selection of such connection device(s) is the responsibility of others.
10) This truss is designed for a creep factor of 3.01, which is used to calculate the Vert(CT) deflection per ANSI/TPI 1.
11) In the LOAD CASE(S) section, loads applied to the face of the truss are noted as front (F) or back (B).

LOAD CASE(S) Standard
1) Dead + Snow (balanced): Lumber Increase=1.15, Plate Increase=1.15
Uniform Loads (plf)
Vert: 1-3=-88, 3-4=-88, 1-5=-20

December 11,2019

WARNING - Verify design parameters and READ NOTES ON THIS AND INCLUDED MITEK REFERENCE PAGE MII-7473 rev. 10/03/2015 BEFORE USE.
Design valid for use only with MiTek® connectors. This design is based only upon parameters shown, and is for an individual building component, not a truss system. Before use, the building designer must verify the applicability of design parameters and properly incorporate this design into the overall building design. Bracing indicated is to prevent buckling of individual truss web and/or chord members only. Additional temporary and permanent bracing is always required for stability and to prevent collapse with possible personal injury and property damage. For general guidance regarding the fabrication, storage, delivery, erection and bracing of trusses and truss systems, see ***ANSI/TPI1 Quality Criteria, DSB-89 and BCSI Building Component Safety Information*** available from Truss Plate Institute, 218 N. Lee Street, Suite 312, Alexandria, VA 22314.

MiTek USA, Inc.
400 Sunrise Avenue, Suite 270
Roseville, CA 95661

Job	Truss	Truss Type	Qty	Ply	ESPINOZA R60548638
J19-319	D02	Common	1	1	Job Reference (optional)

Stockton Truss, STOCKTON, CA 95215 8.330 s Dec 5 2019 MiTek Industries, Inc. Tue Dec 10 11:43:25 2019 Page 1
ID:eURouH3h5RzkGDlILuCRE8yWpf_-BLDDl1QTt3b7lRSNS1EAnDivabuSzOOZym2tcQyANb0

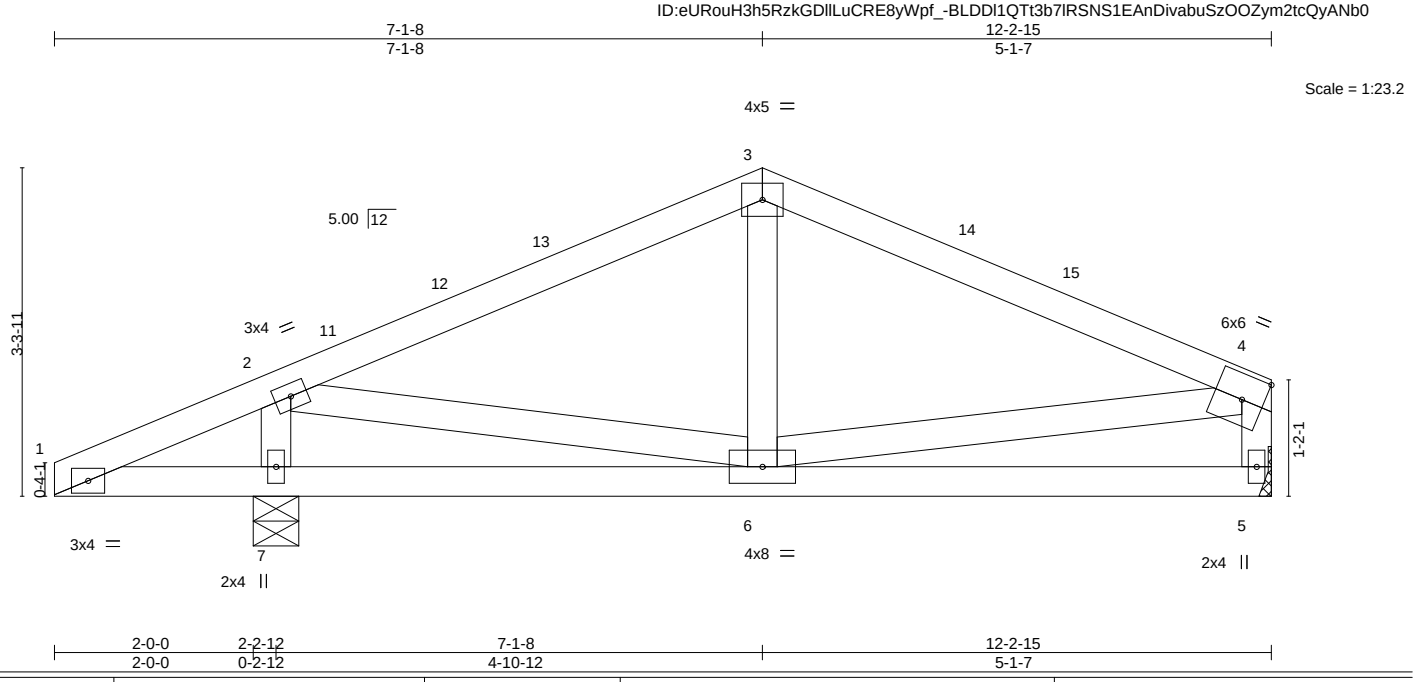

LOADING (psf)		SPACING-	2-0-0	CSI.		DEFL.	in	(loc)	l/defl	L/d	PLATES	GRIP
TCLL	30.0	Plate Grip DOL	1.15	TC	0.52	Vert(LL)	-0.01	5-6	>999	240	MT20	220/195
(Roof Snow=30.0)		Lumber DOL	1.15	BC	0.12	Vert(CT)	-0.04	5-6	>999	180		
TCDL	14.0	Rep Stress Incr	YES	WB	0.22	Horz(CT)	0.00	5	n/a	n/a		
BCLL	0.0 *	Code	IBC2015/TPI2014	Matrix-MSH		Wind(LL)	0.02	5-6	>999	360	Weight: 54 lb	FT = 20%
BCDL	10.0											

LUMBER-
TOP CHORD 2x4 DF No.1&Btr G
BOT CHORD 2x4 DF No.1&Btr G
WEBS 2x4 DF Std G

BRACING-
TOP CHORD Structural wood sheathing directly applied or 6-0-0 oc purlins, except end verticals.
BOT CHORD Rigid ceiling directly applied or 6-0-0 oc bracing.

REACTIONS. (lb/size) 5=506/Mechanical, 7=801/0-5-8
Max Horz 7=43(LC 14)
Max Uplift 5=-71(LC 11), 7=-103(LC 10)

FORCES. (lb) - Max. Comp./Max. Ten. - All forces 250 (lb) or less except when shown.
TOP CHORD 2-3=-566/338, 3-4=-562/344, 4-5=-457/231
WEBS 2-6=-300/504, 2-7=-721/307, 4-6=-173/301

NOTES-
1) Wind: ASCE 7-10; Vult=110mph (3-second gust) Vasd=87mph; TCDL=7.2psf; BCDL=4.2psf; h=25ft; Cat. II; Exp C; Enclosed; MWFRS (envelope) and C-C Exterior(2) 0-0-0 to 3-0-0, Interior(1) 3-0-0 to 7-1-8, Exterior(2) 7-1-8 to 10-1-8, Interior(1) 10-1-8 to 12-1-3 zone; cantilever left and right exposed ; porch left and right exposed;C-C for members and forces & MWFRS for reactions shown; Lumber DOL=1.33 plate grip DOL=1.33
2) TCLL: ASCE 7-10; Pf=30.0 psf (flat roof snow); Category II; Exp C; Partially Exp.; Ct=1.00
3) Unbalanced snow loads have been considered for this design.
4) This truss has been designed for a 10.0 psf bottom chord live load nonconcurrent with any other live loads.
5) * This truss has been designed for a live load of 20.0psf on the bottom chord in all areas where a rectangle 3-6-0 tall by 2-0-0 wide will fit between the bottom chord and any other members.
6) A plate rating reduction of 20% has been applied for the green lumber members.
7) Refer to girder(s) for truss to truss connections.
8) Provide mechanical connection (by others) of truss to bearing plate capable of withstanding 100 lb uplift at joint(s) 5 except (jt=lb) 7=103.
9) This truss is designed for a creep factor of 3.01, which is used to calculate the Vert(CT) deflection per ANSI/TPI 1.

December 11,2019

WARNING - Verify design parameters and READ NOTES ON THIS AND INCLUDED MITEK REFERENCE PAGE MII-7473 rev. 10/03/2015 BEFORE USE.
Design valid for use only with MiTek® connectors. This design is based only upon parameters shown, and is for an individual building component, not a truss system. Before use, the building designer must verify the applicability of design parameters and properly incorporate this design into the overall building design. Bracing indicated is to prevent buckling of individual truss web and/or chord members only. Additional temporary and permanent bracing is always required for stability and to prevent collapse with possible personal injury and property damage. For general guidance regarding the fabrication, storage, delivery, erection and bracing of trusses and truss systems, see ***ANSI/TPI1 Quality Criteria, DSB-89 and BCSI Building Component Safety Information*** available from Truss Plate Institute, 218 N. Lee Street, Suite 312, Alexandria, VA 22314.

MiTek USA, Inc.
400 Sunrise Avenue, Suite 270
Roseville, CA 95661

Job	Truss	Truss Type	Qty	Ply	ESPINOZA R60548639
J19-319	D03	Hip	1	1	Job Reference (optional)

Stockton Truss, STOCKTON, CA 95215 8.330 s Dec 5 2019 MiTek Industries, Inc. Tue Dec 10 11:43:27 2019 Page 1
ID:eURouH3h5RzkGDllLuCRE8yWpf_-7kL_AjSjPgrr_lblaSHfsenKqPWPRDorQ4X_gJyANb_

3-3-10	4-3-0	6-2-0	7-1-9	8-1-1	10-0-1	10-11-6	12-2-15
3-3-10	0-11-6	1-11-0	0-11-8	0-11-8	1-11-0	0-11-5	1-3-9

Scale = 1:20.8

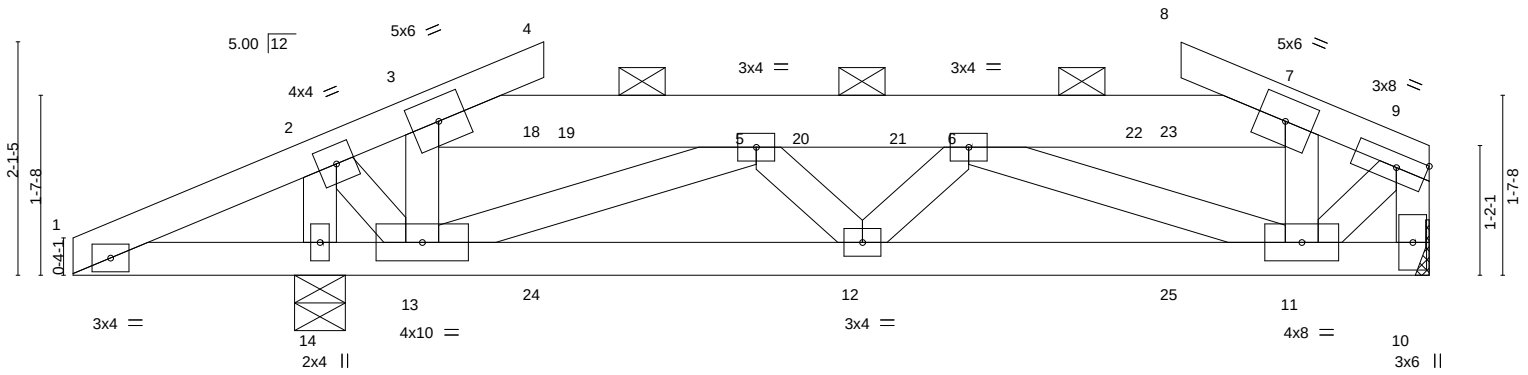

2-0-0	2-2-12	3-3-10	4-3-0	7-1-9	10-0-1	10-11-6	12-2-15
2-0-0	0-2-12	1-0-14	0-11-6	2-10-9	2-10-9	0-11-5	1-3-9

LOADING (psf)		**SPACING-**	2-0-0	**CSI.**		**DEFL.**	in	(loc)	l/defl	L/d	**PLATES**	**GRIP**
TCLL	30.0	Plate Grip DOL	1.15	TC	0.21	Vert(LL)	-0.05	12	>999	240	MT20	220/195
(Roof Snow=30.0)		Lumber DOL	1.15	BC	0.34	Vert(CT)	-0.09	12	>999	180		
TCDL	14.0	Rep Stress Incr	YES	WB	0.55	Horz(CT)	0.03	10	n/a	n/a		
BCLL	0.0 *	Code	IBC2015/TPI2014	Matrix-MSH		Wind(LL)	0.03	11-12	>999	360	Weight: 63 lb	FT = 20%
BCDL	10.0											

LUMBER-
TOP CHORD 2x4 DF No.1&Btr G *Except* 3-7: 2x6 DF SS G
BOT CHORD 2x4 DF No.1&Btr G
WEBS 2x4 DF Std G

BRACING-
TOP CHORD Structural wood sheathing directly applied or 6-0-0 oc purlins, except end verticals, and 2-0-0 oc purlins (5-8-12 max.): 3-7.
BOT CHORD Rigid ceiling directly applied or 6-0-0 oc bracing.

REACTIONS. (lb/size) 10=917/Mechanical, 14=1324/0-5-8
Max Horz 14=32(LC 14)
Max Uplift 10=-205(LC 10), 14=-273(LC 10)
Max Grav 10=1004(LC 32), 14=1542(LC 32)

FORCES. (lb) - Max. Comp./Max. Ten. - All forces 250 (lb) or less except when shown.
TOP CHORD 1-2=-140/347, 2-3=-731/324, 3-5=-716/379, 5-6=-2144/923, 6-7=-795/512, 7-9=-836/463, 9-10=-999/538
BOT CHORD 1-14=-274/148, 13-14=-274/146, 12-13=-759/2145, 11-12=-812/2105
WEBS 2-14=-1357/615, 3-13=-354/83, 2-13=-587/1242, 9-11=-579/1041, 5-13=-1553/565, 6-11=-1422/417

NOTES-
1) Wind: ASCE 7-10; Vult=110mph (3-second gust) Vasd=87mph; TCDL=7.2psf; BCDL=4.2psf; h=25ft; Cat. II; Exp C; Enclosed; MWFRS (envelope) and C-C Exterior(2) 0-0-0 to 3-1-13, Interior(1) 3-1-13 to 4-3-0, Exterior(2) 3-1-13 to 7-4-12, Interior(1) 7-4-12 to 11-1-2, Exterior(2) 10-0-1 to 12-1-2 zone; cantilever left and right exposed ; porch left and right exposed;C-C for members and forces & MWFRS for reactions shown; Lumber DOL=1.33 plate grip DOL=1.33
2) TCLL: ASCE 7-10; Pf=30.0 psf (flat roof snow); Category II; Exp C; Partially Exp.; Ct=1.00
3) Unbalanced snow loads have been considered for this design.
4) Provide adequate drainage to prevent water ponding.
5) This truss has been designed for a 10.0 psf bottom chord live load nonconcurrent with any other live loads.
6) * This truss has been designed for a live load of 20.0psf on the bottom chord in all areas where a rectangle 3-6-0 tall by 2-0-0 wide will fit between the bottom chord and any other members.
7) A plate rating reduction of 20% has been applied for the green lumber members.
8) Refer to girder(s) for truss to truss connections.
9) Provide mechanical connection (by others) of truss to bearing plate capable of withstanding 100 lb uplift at joint(s) except (jt=lb) 10=205, 14=273.
10) Graphical purlin representation does not depict the size or the orientation of the purlin along the top and/or bottom chord.
11) Hanger(s) or other connection device(s) shall be provided sufficient to support concentrated load(s) 340 lb down and 227 lb up at 4-6-12, 276 lb down and 93 lb up at 6-8-3, and 276 lb down and 93 lb up at 7-6-12, and 136 lb down and 144 lb up at 9-8-5 on top chord. The design/selection of such connection device(s) is the responsibility of others.
12) This truss is designed for a creep factor of 3.01, which is used to calculate the Vert(CT) deflection per ANSI/TPI 1.

LOAD CASE(S) Standard

REGISTERED PROFESSIONAL ENGINEER
EDUARD TEODOSESCU
C 75435
EXP. 03/31/2020
STATE OF CALIFORNIA

December 11,2019

Continued on page 2

WARNING - Verify design parameters and READ NOTES ON THIS AND INCLUDED MITEK REFERENCE PAGE MII-7473 rev. 10/03/2015 BEFORE USE.
Design valid for use only with MiTek® connectors. This design is based only upon parameters shown, and is for an individual building component, not a truss system. Before use, the building designer must verify the applicability of design parameters and properly incorporate this design into the overall building design. Bracing indicated is to prevent buckling of individual truss web and/or chord members only. Additional temporary and permanent bracing is always required for stability and to prevent collapse with possible personal injury and property damage. For general guidance regarding the fabrication, storage, delivery, erection and bracing of trusses and truss systems, see ***ANSI/TPI1 Quality Criteria, DSB-89 and BCSI Building Component Safety Information*** available from Truss Plate Institute, 218 N. Lee Street, Suite 312, Alexandria, VA 22314.

MiTek USA, Inc.
400 Sunrise Avenue, Suite 270
Roseville, CA 95661

LOAD CASE(S) Standard

1) Dead + Snow (balanced): Lumber Increase=1.15, Plate Increase=1.15
   Uniform Loads (plf)
   Vert: 1-3=-88, 3-4=-88, 3-7=-88, 7-8=-88, 7-9=-88, 10-15=-20
   Concentrated Loads (lb)
   Vert: 19=-241 20=-230 21=-230 22=-40

WARNING - Verify design parameters and READ NOTES ON THIS AND INCLUDED MITEK REFERENCE PAGE MII-7473 rev. 10/03/2015 BEFORE USE.
Design valid for use only with MiTek® connectors. This design is based only upon parameters shown, and is for an individual building component, not a truss system. Before use, the building designer must verify the applicability of design parameters and properly incorporate this design into the overall building design. Bracing indicated is to prevent buckling of individual truss web and/or chord members only. Additional temporary and permanent bracing is always required for stability and to prevent collapse with possible personal injury and property damage. For general guidance regarding the fabrication, storage, delivery, erection and bracing of trusses and truss systems, see ***ANSI/TPI1 Quality Criteria, DSB-89 and BCSI Building Component Safety Information*** available from Truss Plate Institute, 218 N. Lee Street, Suite 312, Alexandria, VA 22314.

MiTek USA, Inc.
400 Sunrise Avenue, Suite 270
Roseville, CA 95661

Job	Truss	Truss Type	Qty	Ply	ESPINOZA R60548640
J19-319	E01	Monopitch Girder	1	1	Job Reference (optional)

Stockton Truss, STOCKTON, CA 95215 8.330 s Dec 5 2019 MiTek Industries, Inc. Tue Dec 10 11:43:28 2019 Page 1
ID:eURouH3h5RzkGDllLuCRE8yWpf_-cwuMN3SLA_zicvAy79ouPsKX1psrAhP?ekGXBlyANaz

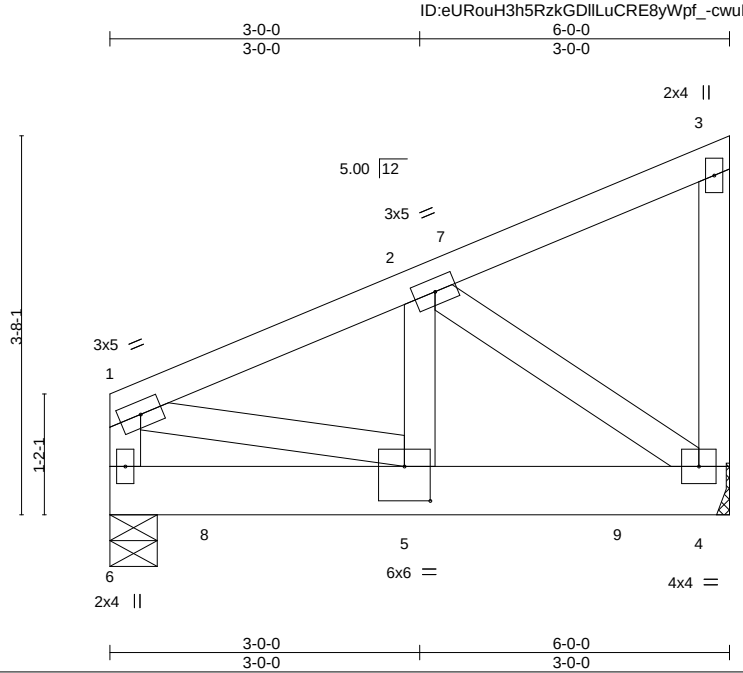

Plate Offsets (X,Y)-- [5:0-3-0,0-4-0]

LOADING (psf)		SPACING-	2-0-0	CSI.		DEFL.	in	(loc)	l/defl	L/d	PLATES	GRIP
TCLL	30.0	Plate Grip DOL	1.15	TC	0.12	Vert(LL)	-0.01	5-6	>999	240	MT20	220/195
(Roof Snow=30.0)		Lumber DOL	1.15	BC	0.33	Vert(CT)	-0.03	5-6	>999	180		
TCDL	14.0	Rep Stress Incr	NO	WB	0.46	Horz(CT)	0.00	4	n/a	n/a		
BCLL	0.0 *	Code	IBC2015/TPI2014	Matrix-MP		Wind(LL)	0.01	5-6	>999	360	Weight: 37 lb	FT = 20%
BCDL	10.0											

LUMBER-
TOP CHORD 2x4 DF No.1&Btr G
BOT CHORD 2x6 DF SS G
WEBS 2x4 DF Std G

BRACING-
TOP CHORD Structural wood sheathing directly applied or 6-0-0 oc purlins, except end verticals.
BOT CHORD Rigid ceiling directly applied or 10-0-0 oc bracing.

REACTIONS. (lb/size) 6=1445/0-5-8, 4=1129/Mechanical
Max Horz 6=62(LC 10)
Max Uplift 6=-121(LC 7), 4=-88(LC 7)
Max Grav 6=1452(LC 16), 4=1156(LC 16)

FORCES. (lb) - Max. Comp./Max. Ten. - All forces 250 (lb) or less except when shown.
TOP CHORD 1-2=-1116/70, 1-6=-813/43
BOT CHORD 4-5=-93/1003
WEBS 2-5=-78/857, 2-4=-1231/114, 1-5=-49/1046

NOTES-
1) Wind: ASCE 7-10; Vult=110mph (3-second gust) Vasd=87mph; TCDL=7.2psf; BCDL=4.2psf; h=25ft; Cat. II; Exp C; Enclosed; MWFRS (envelope); cantilever left and right exposed ; porch left and right exposed; Lumber DOL=1.33 plate grip DOL=1.33
2) TCLL: ASCE 7-10; Pf=30.0 psf (flat roof snow); Category II; Exp C; Partially Exp.; Ct=1.00
3) Unbalanced snow loads have been considered for this design.
4) This truss has been designed for a 10.0 psf bottom chord live load nonconcurrent with any other live loads.
5) * This truss has been designed for a live load of 20.0psf on the bottom chord in all areas where a rectangle 3-6-0 tall by 2-0-0 wide will fit between the bottom chord and any other members.
6) A plate rating reduction of 20% has been applied for the green lumber members.
7) Refer to girder(s) for truss to truss connections.
8) Provide mechanical connection (by others) of truss to bearing plate capable of withstanding 100 lb uplift at joint(s) 4 except (jt=lb) 6=121.
9) Hanger(s) or other connection device(s) shall be provided sufficient to support concentrated load(s) 985 lb down and 117 lb up at 1-0-12, and 486 lb down and 22 lb up at 3-0-12, and 488 lb down and 20 lb up at 5-0-12 on bottom chord. The design/selection of such connection device(s) is the responsibility of others.
10) This truss is designed for a creep factor of 3.01, which is used to calculate the Vert(CT) deflection per ANSI/TPI 1.
11) In the LOAD CASE(S) section, loads applied to the face of the truss are noted as front (F) or back (B).

LOAD CASE(S) Standard
1) Dead + Snow (balanced): Lumber Increase=1.15, Plate Increase=1.15
Uniform Loads (plf)
Vert: 1-3=-88, 4-6=-20
Concentrated Loads (lb)
Vert: 5=-486(B) 8=-985(B) 9=-488(B)

December 11,2019

WARNING - Verify design parameters and READ NOTES ON THIS AND INCLUDED MITEK REFERENCE PAGE MII-7473 rev. 10/03/2015 BEFORE USE.
Design valid for use only with MiTek® connectors. This design is based only upon parameters shown, and is for an individual building component, not a truss system. Before use, the building designer must verify the applicability of design parameters and properly incorporate this design into the overall building design. Bracing indicated is to prevent buckling of individual truss web and/or chord members only. Additional temporary and permanent bracing is always required for stability and to prevent collapse with possible personal injury and property damage. For general guidance regarding the fabrication, storage, delivery, erection and bracing of trusses and truss systems, see ***ANSI/TPI1 Quality Criteria, DSB-89 and BCSI Building Component Safety Information*** available from Truss Plate Institute, 218 N. Lee Street, Suite 312, Alexandria, VA 22314.

MiTek USA, Inc.
400 Sunrise Avenue, Suite 270
Roseville, CA 95661

Job	Truss	Truss Type	Qty	Ply	ESPINOZA R60548641
J19-319	F01	Half Hip	1	1	Job Reference (optional)

Stockton Truss , STOCKTON, CA 95215 8.320 s Nov 19 2019 MiTek Industries, Inc. Tue Dec 10 12:58:56 2019 Page 1
ID:eURouH3h5RzkGDllLuCRE8yWpf_-MCn3?ZzpD1e47iRzU5gwz33caRcg3oiFVOD7q_yAKjj

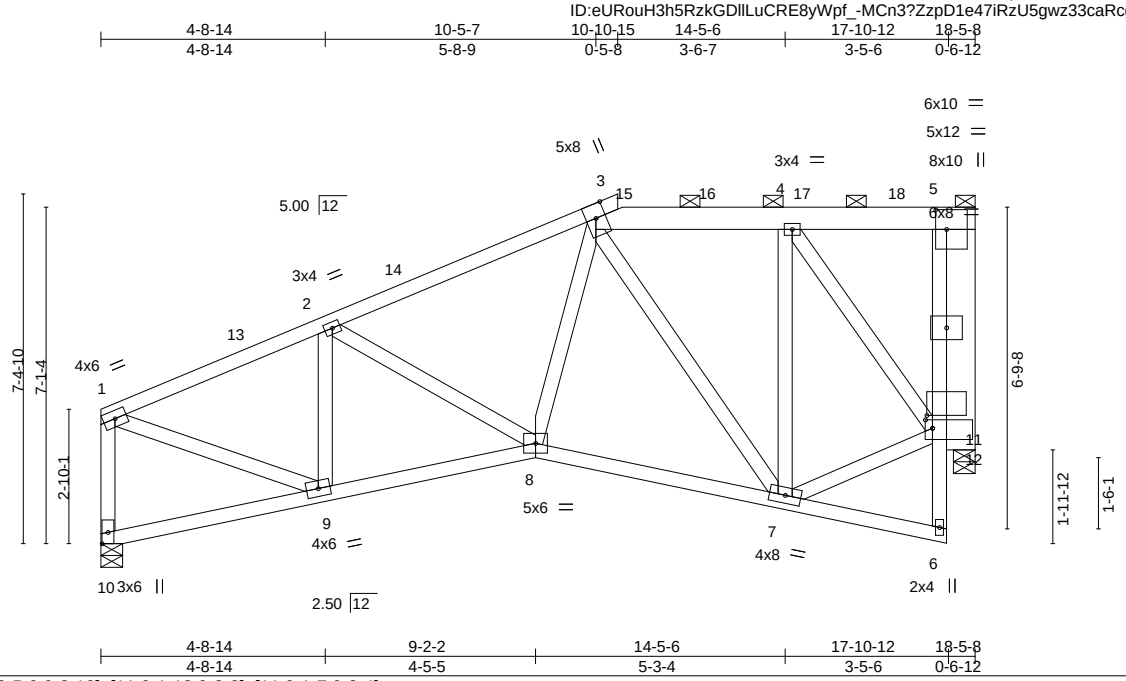

Plate Offsets (X,Y)-- [5:0-5-0,0-2-12], [11:0-1-13,0-2-2], [11:0-1-7,0-3-4]

LOADING (psf)		SPACING-	2-0-0	CSI.		DEFL.	in	(loc)	l/defl	L/d	PLATES	GRIP
TCLL	30.0	Plate Grip DOL	1.15	TC	0.74	Vert(LL)	-0.04	8-9	>999	240	MT20	220/195
(Roof Snow=30.0)		Lumber DOL	1.15	BC	0.33	Vert(CT)	-0.10	7-8	>999	180		
TCDL	14.0	Rep Stress Incr	YES	WB	0.85	Horz(CT)	0.04	12	n/a	n/a		
BCLL	0.0 *	Code	IBC2015/TPI2014	Matrix-MSH		Wind(LL)	0.08	7-8	>999	360		
BCDL	10.0										Weight: 138 lb	FT = 20%

LUMBER-

TOP CHORD	2x4 DF No.1&Btr G *Except* 3-5: 2x6 DF SS G
BOT CHORD	2x4 DF No.1&Btr G *Except* 5-6: 2x4 DF Std G
WEBS	2x4 DF Std G
OTHERS	2x8 DF SS

BRACING-

TOP CHORD	Structural wood sheathing directly applied or 4-5-12 oc purlins, except end verticals, and 2-0-0 oc purlins (6-0-0 max.): 3-5.
BOT CHORD	Rigid ceiling directly applied or 4-11-12 oc bracing.

MiTek recommends that Stabilizers and required cross bracing be installed during truss erection, in accordance with Stabilizer Installation guide.

REACTIONS. (lb/size) 10=1066/0-5-8 (min. 0-1-10), 12=1955/0-5-8 (min. 0-1-8)
Max Horz 10=231(LC 38)
Max Uplift 10=-981(LC 40), 12=-716(LC 41)
Max Grav 10=1577(LC 31), 12=2015(LC 70)

FORCES. (lb) - Max. Comp./Max. Ten. - All forces 250 (lb) or less except when shown.

TOP CHORD	1-13=-2003/1960, 2-13=-1451/1402, 2-14=-2073/2016, 3-14=-1638/1588, 3-15=-1078/976, 15-16=-1040/926, 4-16=-774/531, 4-17=-537/437, 17-18=-230/296, 1-10=-1536/1439
BOT CHORD	11-12=-1891/1218, 5-11=-843/133, 9-10=-1227/626, 8-9=-1770/1484, 7-8=-1622/1351, 6-7=-496/449
WEBS	2-9=-936/726, 2-8=-880/806, 3-8=-1041/722, 3-7=-970/1135, 4-7=-599/432, 7-11=-937/808, 4-11=-1111/914, 1-9=-1891/1898

NOTES-

1) Wind: ASCE 7-10; Vult=110mph (3-second gust) Vasd=87mph; TCDL=7.2psf; BCDL=4.2psf; h=25ft; Cat. II; Exp C; Enclosed; MWFRS (envelope) and C-C Exterior(2) 0-1-12 to 3-1-12, Interior(1) 3-1-12 to 10-8-3, Exterior(2) 10-8-3 to 14-11-2, Interior(1) 14-11-2 to 17-8-8 zone; cantilever left and right exposed ; porch left and right exposed;C-C for members and forces & MWFRS for reactions shown; Lumber DOL=1.33 plate grip DOL=1.33
2) TCLL: ASCE 7-10; Pf=30.0 psf (flat roof snow); Category II; Exp C; Partially Exp.; Ct=1.00
3) Unbalanced snow loads have been considered for this design.
4) Provide adequate drainage to prevent water ponding.
5) This truss has been designed for a 10.0 psf bottom chord live load nonconcurrent with any other live loads.
6) * This truss has been designed for a live load of 20.0psf on the bottom chord in all areas where a rectangle 3-6-0 tall by 2-0-0 wide will fit between the bottom chord and any other members.
7) A plate rating reduction of 20% has been applied for the green lumber members.
8) Bearing at joint(s) 10, 12 considers parallel to grain value using ANSI/TPI 1 angle to grain formula. Building designer should verify capacity of bearing surface.
9) Provide mechanical connection (by others) of truss to bearing plate capable of withstanding 981 lb uplift at joint 10 and 716 lb uplift at joint 12.
10) This truss has been designed for a total drag load of 2400 lb. Lumber DOL=(1.33) Plate grip DOL=(1.33) Connect truss to resist drag loads along bottom chord from 0-0-0 to 18-5-8 for 130.0 plf.
11) Graphical purlin representation does not depict the size or the orientation of the purlin along the top and/or bottom chord.
12) Hanger(s) or other connection device(s) shall be provided sufficient to support concentrated load(s) 338 lb down and 145 lb up at 11-0-12, 46 lb down and 18 lb up at 12-9-12, and 121 lb down and 58 lb up at 14-9-12, and 987 lb down and 194 lb up at 16-9-12 on top chord. The design/selection of such connection device(s) is the responsibility of others.

Continued on page 2

REGISTERED PROFESSIONAL ENGINEER
EDUARD TEODOSESCU
C 75435
EXP. 03/31/2020
STATE OF CALIFORNIA

December 11,2019

WARNING - Verify design parameters and READ NOTES ON THIS AND INCLUDED MITEK REFERENCE PAGE MII-7473 rev. 10/03/2015 BEFORE USE.
Design valid for use only with MiTek® connectors. This design is based only upon parameters shown, and is for an individual building component, not a truss system. Before use, the building designer must verify the applicability of design parameters and properly incorporate this design into the overall building design. Bracing indicated is to prevent buckling of individual truss web and/or chord members only. Additional temporary and permanent bracing is always required for stability and to prevent collapse with possible personal injury and property damage. For general guidance regarding the fabrication, storage, delivery, erection and bracing of trusses and truss systems, see ***ANSI/TPI1 Quality Criteria, DSB-89 and BCSI Building Component Safety Information*** available from Truss Plate Institute, 218 N. Lee Street, Suite 312, Alexandria, VA 22314.

MiTek USA, Inc.
400 Sunrise Avenue, Suite 270
Roseville, CA 95661

NOTES-

13) This truss is designed for a creep factor of 3.01, which is used to calculate the Vert(CT) deflection per ANSI/TPI 1.

LOAD CASE(S) Standard

1) Dead + Snow (balanced): Lumber Increase=1.15, Plate Increase=1.15
   Uniform Loads (plf)
   Vert: 1-3=-88, 3-5=-88, 8-10=-20, 6-8=-20
   Concentrated Loads (lb)
   Vert: 15=-168 16=-26 17=-1 18=-930

WARNING - Verify design parameters and READ NOTES ON THIS AND INCLUDED MITEK REFERENCE PAGE MII-7473 rev. 10/03/2015 BEFORE USE.
Design valid for use only with MiTek® connectors. This design is based only upon parameters shown, and is for an individual building component, not a truss system. Before use, the building designer must verify the applicability of design parameters and properly incorporate this design into the overall building design. Bracing indicated is to prevent buckling of individual truss web and/or chord members only. Additional temporary and permanent bracing is always required for stability and to prevent collapse with possible personal injury and property damage. For general guidance regarding the fabrication, storage, delivery, erection and bracing of trusses and truss systems, see ***ANSI/TPI1 Quality Criteria, DSB-89 and BCSI Building Component Safety Information*** available from Truss Plate Institute, 218 N. Lee Street, Suite 312, Alexandria, VA 22314.

MiTek USA, Inc.
400 Sunrise Avenue, Suite 270
Roseville, CA 95661

Job	Truss	Truss Type	Qty	Ply	ESPINOZA R60548642
J19-319	F02	Half Hip	1	1	Job Reference (optional)

Stockton Truss, STOCKTON, CA 95215 8.330 s Dec 5 2019 MiTek Industries, Inc. Tue Dec 10 11:43:33 2019 Page 1
ID:eURouH3h5RzkGDllLuCRE8yWpf_-yuiFQmWU?Wb?ig3vwiO36v1DDqZdrwvko0_ItzyANau

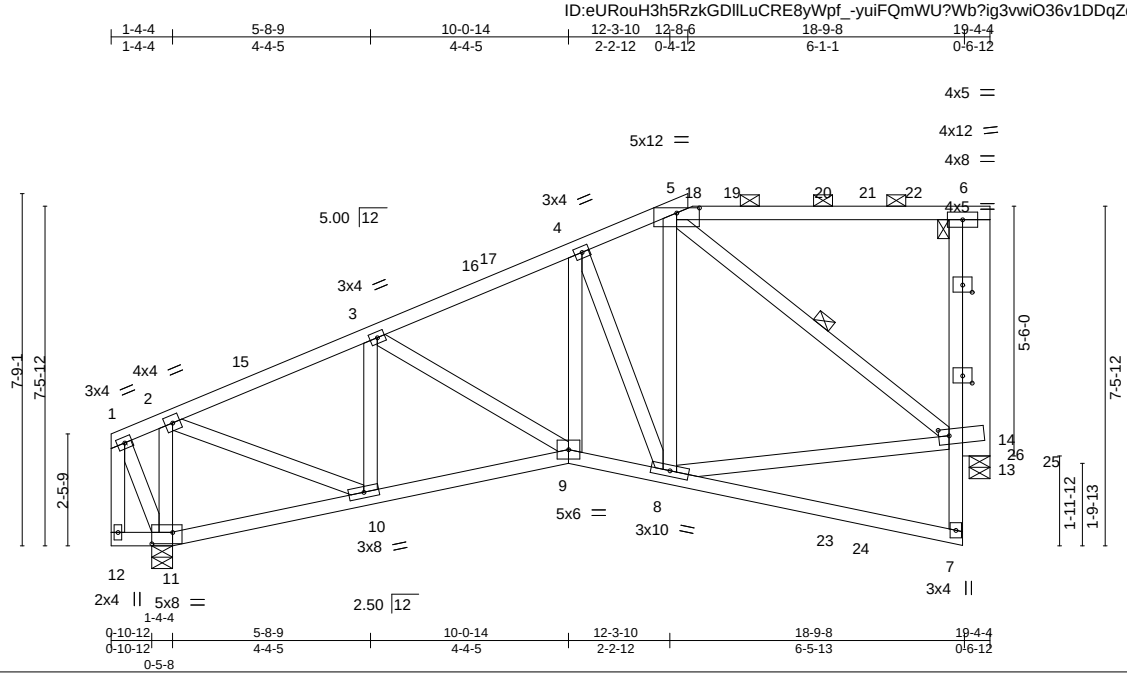

Plate Offsets (X,Y)-- [5:0-6-0,0-1-6], [11:0-5-8,0-3-0], [13:0-2-12,0-1-12], [13:0-2-8,0-1-14], [13:0-2-8,0-1-14]

LOADING (psf)		SPACING-	2-0-0	CSI.		DEFL.	in	(loc)	l/defl	L/d	PLATES	GRIP
TCLL	30.0	Plate Grip DOL	1.15	TC	0.79	Vert(LL)	-0.05	9	>999	240	MT20	220/195
(Roof Snow=30.0)		Lumber DOL	1.15	BC	0.35	Vert(CT)	-0.12	7-8	>999	180		
TCDL	14.0	Rep Stress Incr	YES	WB	0.64	Horz(CT)	0.05	14	n/a	n/a		
BCLL	0.0 *	Code	IBC2015/TPI2014	Matrix-MSH		Wind(LL)	0.09	7-8	>999	360	Weight: 146 lb	FT = 20%
BCDL	10.0											

LUMBER-
TOP CHORD 2x4 DF No.1&Btr G
BOT CHORD 2x4 DF No.1&Btr G *Except*
6-7: 2x4 DF Std G, 6-14: 2x8 DF SS
WEBS 2x4 DF Std G

BRACING-
TOP CHORD Structural wood sheathing directly applied or 4-11-14 oc purlins, except end verticals, and 2-0-0 oc purlins (6-0-0 max.): 5-6.
BOT CHORD Rigid ceiling directly applied or 6-0-0 oc bracing.
WEBS 1 Row at midpt 5-13

REACTIONS. (lb/size) 11=1157/0-5-8, 14=1058/0-5-8
Max Horz 11=135(LC 11)
Max Uplift 11=-133(LC 10), 14=-208(LC 11)
Max Grav 11=1578(LC 29), 14=1166(LC 29)

FORCES. (lb) - Max. Comp./Max. Ten. - All forces 250 (lb) or less except when shown.
TOP CHORD 2-3=-1525/736, 3-4=-1586/778, 4-5=-1116/613
BOT CHORD 9-10=-837/1338, 8-9=-774/1353, 13-14=-859/535, 6-13=-464/74
WEBS 2-11=-1578/604, 2-10=-697/1442, 3-10=-706/81, 4-9=-427/551, 4-8=-824/451, 5-8=-576/510, 8-13=-572/966, 5-13=-1155/681

NOTES-
1) Wind: ASCE 7-10; Vult=110mph (3-second gust) Vasd=87mph; TCDL=7.2psf; BCDL=4.2psf; h=25ft; Cat. II; Exp C; Enclosed; MWFRS (envelope) and C-C Exterior(2) 0-1-12 to 3-1-12, Interior(1) 3-1-12 to 12-5-7, Exterior(2) 12-5-7 to 16-8-5, Interior(1) 16-8-5 to 18-10-13 zone; cantilever left and right exposed ; porch left and right exposed;C-C for members and forces & MWFRS for reactions shown; Lumber DOL=1.33 plate grip DOL=1.33
2) TCLL: ASCE 7-10; Pf=30.0 psf (flat roof snow); Category II; Exp C; Partially Exp.; Ct=1.00
3) Unbalanced snow loads have been considered for this design.
4) Provide adequate drainage to prevent water ponding.
5) This truss has been designed for a 10.0 psf bottom chord live load nonconcurrent with any other live loads.
6) * This truss has been designed for a live load of 20.0psf on the bottom chord in all areas where a rectangle 3-6-0 tall by 2-0-0 wide will fit between the bottom chord and any other members.
7) A plate rating reduction of 20% has been applied for the green lumber members.
8) Bearing at joint(s) 14 considers parallel to grain value using ANSI/TPI 1 angle to grain formula. Building designer should verify capacity of bearing surface.
9) Provide mechanical connection (by others) of truss to bearing plate capable of withstanding 100 lb uplift at joint(s) except (jt=lb) 11=133, 14=208.
10) Graphical purlin representation does not depict the size or the orientation of the purlin along the top and/or bottom chord.
11) Hanger(s) or other connection device(s) shall be provided sufficient to support concentrated load(s) 265 lb down and 145 lb up at 12-10-3, 40 lb down and 18 lb up at 13-8-8, and 85 lb down and 58 lb up at 15-8-8, and 68 lb down and 52 lb up at 17-8-8 on top chord. The design/selection of such connection device(s) is the responsibility of others.
12) This truss is designed for a creep factor of 3.01, which is used to calculate the Vert(CT) deflection per ANSI/TPI 1.

LOAD CASE(S) Standard

December 11,2019

Continued on page 2

WARNING - Verify design parameters and READ NOTES ON THIS AND INCLUDED MITEK REFERENCE PAGE MII-7473 rev. 10/03/2015 BEFORE USE.
Design valid for use only with MiTek® connectors. This design is based only upon parameters shown, and is for an individual building component, not a truss system. Before use, the building designer must verify the applicability of design parameters and properly incorporate this design into the overall building design. Bracing indicated is to prevent buckling of individual truss web and/or chord members only. Additional temporary and permanent bracing is always required for stability and to prevent collapse with possible personal injury and property damage. For general guidance regarding the fabrication, storage, delivery, erection and bracing of trusses and truss systems, see ***ANSI/TPI1 Quality Criteria, DSB-89 and BCSI Building Component Safety Information*** available from Truss Plate Institute, 218 N. Lee Street, Suite 312, Alexandria, VA 22314.

MiTek USA, Inc.
400 Sunrise Avenue, Suite 270
Roseville, CA 95661

LOAD CASE(S) Standard

1) Dead + Snow (balanced): Lumber Increase=1.15, Plate Increase=1.15
   Uniform Loads (plf)
   Vert: 1-5=-88, 5-6=-88, 11-12=-20, 9-11=-20, 7-9=-20
   Concentrated Loads (lb)
   Vert: 18=-168 19=-26 20=-1

WARNING - Verify design parameters and READ NOTES ON THIS AND INCLUDED MITEK REFERENCE PAGE MII-7473 rev. 10/03/2015 BEFORE USE.
Design valid for use only with MiTek® connectors. This design is based only upon parameters shown, and is for an individual building component, not a truss system. Before use, the building designer must verify the applicability of design parameters and properly incorporate this design into the overall building design. Bracing indicated is to prevent buckling of individual truss web and/or chord members only. Additional temporary and permanent bracing is always required for stability and to prevent collapse with possible personal injury and property damage. For general guidance regarding the fabrication, storage, delivery, erection and bracing of trusses and truss systems, see ***ANSI/TPI1 Quality Criteria, DSB-89 and BCSI Building Component Safety Information*** available from Truss Plate Institute, 218 N. Lee Street, Suite 312, Alexandria, VA 22314.

MiTek USA, Inc.
400 Sunrise Avenue, Suite 270
Roseville, CA 95661

Job	Truss	Truss Type	Qty	Ply	ESPINOZA R60548643
J19-319	F03	Half Hip	1	1	Job Reference (optional)

Stockton Truss , STOCKTON, CA 95215 — 8.320 s Nov 19 2019 MiTek Industries, Inc. Tue Dec 10 12:59:46 2019 Page 1

ID:eURouH3h5RzkGDllLuCRE8yWpf_-upoyUgaBRPx_7OGaPbZf_b7DMbhGnPvc_9Kna4yAKix

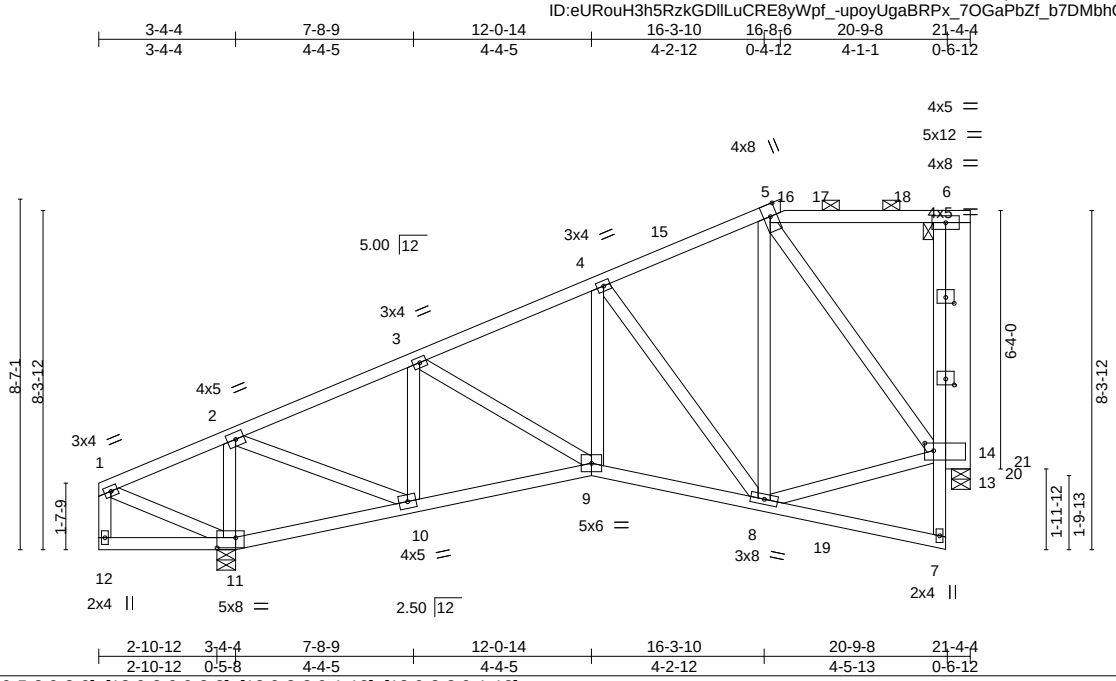

Plate Offsets (X,Y)-- [11:0-5-8,0-3-0], [13:0-2-9,0-2-3], [13:0-2-8,0-1-12], [13:0-2-8,0-1-12]

LOADING (psf)		SPACING-	2-0-0	CSI.		DEFL.	in	(loc)	l/defl	L/d	PLATES	GRIP
TCLL	30.0	Plate Grip DOL	1.15	TC	0.46	Vert(LL)	-0.05	9	>999	240	MT20	220/195
(Roof Snow=30.0)		Lumber DOL	1.15	BC	0.27	Vert(CT)	-0.10	9-10	>999	180		
TCDL	14.0	Rep Stress Incr	YES	WB	0.93	Horz(CT)	0.04	14	n/a	n/a		
BCLL	0.0 *	Code	IBC2015/TPI2014	Matrix-MSH		Wind(LL)	0.05	9-10	>999	360	Weight: 155 lb	FT = 20%
BCDL	10.0											

LUMBER-

TOP CHORD 2x4 DF No.1&Btr G
BOT CHORD 2x4 DF No.1&Btr G *Except*
6-7: 2x4 DF Std G, 6-14: 2x8 DF SS
WEBS 2x4 DF Std G

BRACING-

TOP CHORD Structural wood sheathing directly applied or 5-1-4 oc purlins, except end verticals, and 2-0-0 oc purlins (6-0-0 max.): 5-6.
BOT CHORD Rigid ceiling directly applied or 6-0-0 oc bracing.

MiTek recommends that Stabilizers and required cross bracing be installed during truss erection, in accordance with Stabilizer Installation guide.

REACTIONS. (lb/size) 11=1386/0-5-8 (min. 0-2-1), 14=1163/0-5-8 (min. 0-1-8)
Max Horz 11=172(LC 50)
Max Uplift 11=-147(LC 10), 14=-220(LC 11)
Max Grav 11=1958(LC 29), 14=1334(LC 29)

FORCES. (lb) - Max. Comp./Max. Ten. - All forces 250 (lb) or less except when shown.
TOP CHORD 1-2=-90/314, 2-3=-1397/680, 3-4=-1567/749, 4-15=-862/389, 5-15=-752/401
BOT CHORD 10-11=-306/0, 9-10=-813/1212, 8-9=-806/1354, 14-20=-1040/582, 13-20=-1040/582, 13-21=-361/60, 6-21=-361/60
WEBS 2-11=-1723/615, 2-10=-706/1577, 3-10=-785/96, 4-9=-534/499, 4-8=-1033/606, 5-8=-522/465, 8-13=-439/694, 5-13=-1023/579

NOTES-

1) Wind: ASCE 7-10; Vult=110mph (3-second gust) Vasd=87mph; TCDL=7.2psf; BCDL=4.2psf; h=25ft; Cat. II; Exp C; Enclosed; MWFRS (envelope) and C-C Exterior(2) 0-1-12 to 3-2-7, Interior(1) 3-2-7 to 16-5-7, Exterior(2) 16-5-7 to 20-10-13 zone; cantilever left and right exposed ; porch left and right exposed;C-C for members and forces & MWFRS for reactions shown; Lumber DOL=1.33 plate grip DOL=1.33
2) TCLL: ASCE 7-10; Pf=30.0 psf (flat roof snow); Category II; Exp C; Partially Exp.; Ct=1.00
3) Unbalanced snow loads have been considered for this design.
4) Provide adequate drainage to prevent water ponding.
5) This truss has been designed for a 10.0 psf bottom chord live load nonconcurrent with any other live loads.
6) * This truss has been designed for a live load of 20.0psf on the bottom chord in all areas where a rectangle 3-6-0 tall by 2-0-0 wide will fit between the bottom chord and any other members.
7) A plate rating reduction of 20% has been applied for the green lumber members.
8) Bearing at joint(s) 14 considers parallel to grain value using ANSI/TPI 1 angle to grain formula. Building designer should verify capacity of bearing surface.
9) Provide mechanical connection (by others) of truss to bearing plate capable of withstanding 147 lb uplift at joint 11 and 220 lb uplift at joint 14.
10) Graphical purlin representation does not depict the size or the orientation of the purlin along the top and/or bottom chord.
11) Hanger(s) or other connection device(s) shall be provided sufficient to support concentrated load(s) 179 lb down and 114 lb up at 16-10-3, and 158 lb down and 34 lb up at 17-8-8, and 171 lb down and 83 lb up at 19-8-8 on top chord. The design/selection of such connection device(s) is the responsibility of others.
12) This truss is designed for a creep factor of 3.01, which is used to calculate the Vert(CT) deflection per ANSI/TPI 1.

December 11,2019

LOAD CASE(S) Standard

Continued on page 2

WARNING - Verify design parameters and READ NOTES ON THIS AND INCLUDED MITEK REFERENCE PAGE MII-7473 rev. 10/03/2015 BEFORE USE.
Design valid for use only with MiTek® connectors. This design is based only upon parameters shown, and is for an individual building component, not a truss system. Before use, the building designer must verify the applicability of design parameters and properly incorporate this design into the overall building design. Bracing indicated is to prevent buckling of individual truss web and/or chord members only. Additional temporary and permanent bracing is always required for stability and to prevent collapse with possible personal injury and property damage. For general guidance regarding the fabrication, storage, delivery, erection and bracing of trusses and truss systems, see ***ANSI/TPI1 Quality Criteria, DSB-89 and BCSI Building Component Safety Information*** available from Truss Plate Institute, 218 N. Lee Street, Suite 312, Alexandria, VA 22314.

MiTek USA, Inc.
400 Sunrise Avenue, Suite 270
Roseville, CA 95661

LOAD CASE(S) Standard

1) Dead + Snow (balanced): Lumber Increase=1.15, Plate Increase=1.15
   Uniform Loads (plf)
   Vert: 1-5=-88, 5-6=-88, 11-12=-20, 9-11=-20, 7-9=-20
   Concentrated Loads (lb)
   Vert: 16=-82 17=-144 18=-87

WARNING - Verify design parameters and READ NOTES ON THIS AND INCLUDED MITEK REFERENCE PAGE MII-7473 rev. 10/03/2015 BEFORE USE.
Design valid for use only with MiTek® connectors. This design is based only upon parameters shown, and is for an individual building component, not a truss system. Before use, the building designer must verify the applicability of design parameters and properly incorporate this design into the overall building design. Bracing indicated is to prevent buckling of individual truss web and/or chord members only. Additional temporary and permanent bracing is always required for stability and to prevent collapse with possible personal injury and property damage. For general guidance regarding the fabrication, storage, delivery, erection and bracing of trusses and truss systems, see ***ANSI/TPI1 Quality Criteria, DSB-89 and BCSI Building Component Safety Information*** available from Truss Plate Institute, 218 N. Lee Street, Suite 312, Alexandria, VA 22314.

MiTek USA, Inc.
400 Sunrise Avenue, Suite 270
Roseville, CA 95661

Job	Truss	Truss Type	Qty	Ply	ESPINOZA R60548644
J19-319	F04	Half Hip	1	1	Job Reference (optional)

Stockton Truss , STOCKTON, CA 95215 8.320 s Nov 19 2019 MiTek Industries, Inc. Tue Dec 10 13:00:47 2019 Page 1
ID:eURouH3h5RzkGDllLuCRE8yWpf_-cY_0IWJR48dKxmRJUv9yzT9cjBT9a?Vb09cVE2yAKi_

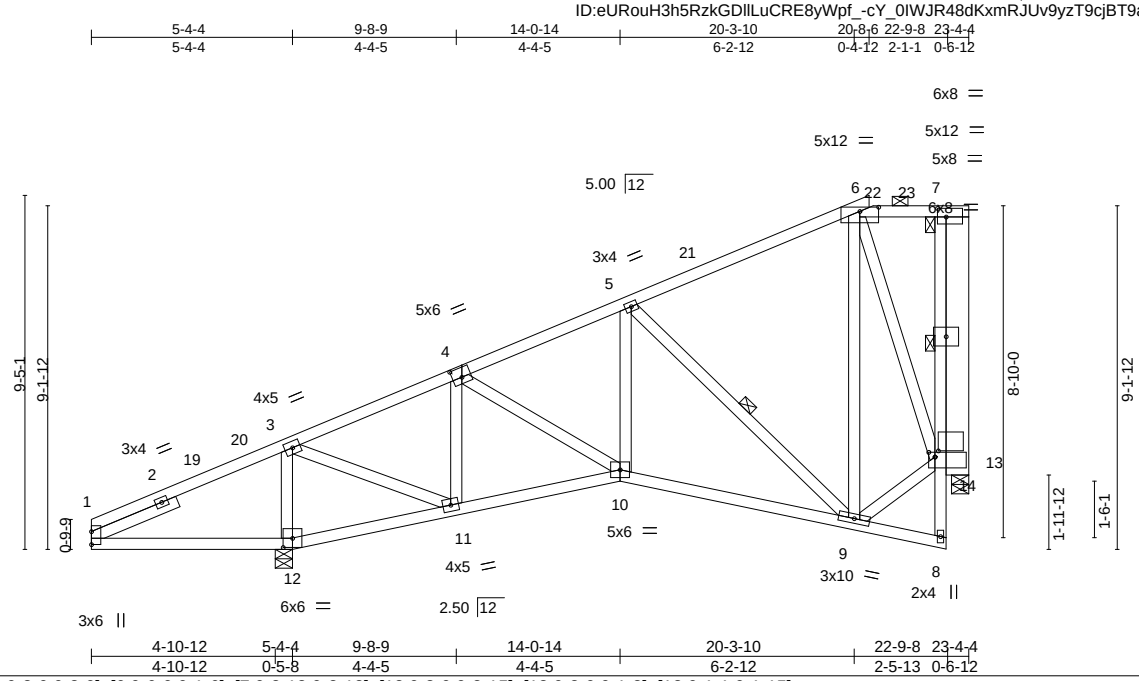

Plate Offsets (X,Y)-- [4:0-3-0,0-3-0], [6:0-6-0,0-1-6], [7:0-2-12,0-2-12], [12:0-3-0,0-2-15], [13:0-2-0,0-1-8], [13:0-1-1,0-1-15]

LOADING (psf)		SPACING-	2-0-0	CSI.		DEFL.	in	(loc)	l/defl	L/d	PLATES	GRIP
TCLL	30.0	Plate Grip DOL	1.15	TC	0.60	Vert(LL)	-0.05	10	>999	240	MT20	220/195
(Roof Snow=30.0)		Lumber DOL	1.15	BC	0.42	Vert(CT)	-0.13	9-10	>999	180		
TCDL	14.0	Rep Stress Incr	YES	WB	0.89	Horz(CT)	0.03	14	n/a	n/a		
BCLL	0.0 *	Code	IBC2015/TPI2014	Matrix-MSH		Wind(LL)	0.10	9-10	>999	360	Weight: 164 lb	FT = 20%
BCDL	10.0											

LUMBER-

TOP CHORD	2x4 DF No.1&Btr G
BOT CHORD	2x4 DF No.1&Btr G *Except* 7-8: 2x4 DF Std G
WEBS	2x4 DF Std G
OTHERS	2x8 DF SS
SLIDER	Left 2x4 DF Std -G-x 2-6-0

BRACING-

TOP CHORD	Structural wood sheathing directly applied or 4-10-15 oc purlins, except 2-0-0 oc purlins (6-0-0 max.): 6-7.
BOT CHORD	Rigid ceiling directly applied or 6-0-0 oc bracing. Except: 6-0-0 oc bracing: 7-14
WEBS	1 Row at midpt 5-9

MiTek recommends that Stabilizers and required cross bracing be installed during truss erection, in accordance with Stabilizer Installation guide.

REACTIONS. (lb/size) 12=1615/0-5-8 (min. 0-2-4), 14=1050/0-5-8 (min. 0-1-8)
Max Horz 12=319(LC 11)
Max Uplift 12=-126(LC 10), 14=-256(LC 11)
Max Grav 12=2090(LC 30), 14=1353(LC 30)

FORCES. (lb) - Max. Comp./Max. Ten. - All forces 250 (lb) or less except when shown.

TOP CHORD	2-19=-266/464, 19-20=-261/496, 3-20=-251/577, 3-4=-1157/478, 4-5=-1415/552, 5-21=-536/0, 6-21=-368/11
BOT CHORD	1-12=-421/269, 11-12=-591/0, 10-11=-1011/1001, 9-10=-1023/1247, 13-14=-1310/862
WEBS	3-12=-1842/639, 3-11=-631/1553, 4-11=-798/80, 4-10=-28/301, 5-10=-681/390, 5-9=-1207/824, 6-9=-365/413, 9-13=-625/488, 6-13=-1040/523

NOTES-

1) Wind: ASCE 7-10; Vult=110mph (3-second gust) Vasd=87mph; TCDL=7.2psf; BCDL=4.2psf; h=25ft; Cat. II; Exp C; Enclosed; MWFRS (envelope) and C-C Exterior(2) 0-0-0 to 3-0-0, Interior(1) 3-0-0 to 20-5-7, Exterior(2) 20-5-7 to 22-7-3 zone; cantilever left and right exposed ; porch left and right exposed;C-C for members and forces & MWFRS for reactions shown; Lumber DOL=1.33 plate grip DOL=1.33
2) TCLL: ASCE 7-10; Pf=30.0 psf (flat roof snow); Category II; Exp C; Partially Exp.; Ct=1.00
3) Unbalanced snow loads have been considered for this design.
4) Provide adequate drainage to prevent water ponding.
5) This truss has been designed for a 10.0 psf bottom chord live load nonconcurrent with any other live loads.
6) * This truss has been designed for a live load of 20.0psf on the bottom chord in all areas where a rectangle 3-6-0 tall by 2-0-0 wide will fit between the bottom chord and any other members.
7) A plate rating reduction of 20% has been applied for the green lumber members.
8) Bearing at joint(s) 14 considers parallel to grain value using ANSI/TPI 1 angle to grain formula. Building designer should verify capacity of bearing surface.
9) Provide mechanical connection (by others) of truss to bearing plate capable of withstanding 126 lb uplift at joint 12 and 256 lb uplift at joint 14.
10) Graphical purlin representation does not depict the size or the orientation of the purlin along the top and/or bottom chord.
11) Hanger(s) or other connection device(s) shall be provided sufficient to support concentrated load(s) 125 lb down and 57 lb up at 20-9-10, 176 lb down and 68 lb up at 20-9-12, and 102 lb down and 41 lb up at 21-8-8, and 55 lb down and 19 lb up at 23-4-3 on top chord. The design/selection of such connection device(s) is the responsibility of others.

December 11,2019

Continued on page 2

WARNING - Verify design parameters and READ NOTES ON THIS AND INCLUDED MITEK REFERENCE PAGE MII-7473 rev. 10/03/2015 BEFORE USE.
Design valid for use only with MiTek® connectors. This design is based only upon parameters shown, and is for an individual building component, not a truss system. Before use, the building designer must verify the applicability of design parameters and properly incorporate this design into the overall building design. Bracing indicated is to prevent buckling of individual truss web and/or chord members only. Additional temporary and permanent bracing is always required for stability and to prevent collapse with possible personal injury and property damage. For general guidance regarding the fabrication, storage, delivery, erection and bracing of trusses and truss systems, see ***ANSI/TPI1 Quality Criteria, DSB-89 and BCSI Building Component Safety Information*** available from Truss Plate Institute, 218 N. Lee Street, Suite 312, Alexandria, VA 22314.

MiTek USA, Inc.
400 Sunrise Avenue, Suite 270
Roseville, CA 95661

NOTES-

12) This truss is designed for a creep factor of 3.01, which is used to calculate the Vert(CT) deflection per ANSI/TPI 1.
13) In the LOAD CASE(S) section, loads applied to the face of the truss are noted as front (F) or back (B).

LOAD CASE(S) Standard

1) Dead + Snow (balanced): Lumber Increase=1.15, Plate Increase=1.15
   Uniform Loads (plf)
   Vert: 1-6=-88, 6-7=-88, 12-15=-20, 10-12=-20, 8-10=-20
   Concentrated Loads (lb)
   Vert: 7=-46 22=-132(B=-92) 23=-46

WARNING - Verify design parameters and READ NOTES ON THIS AND INCLUDED MITEK REFERENCE PAGE MII-7473 rev. 10/03/2015 BEFORE USE.
Design valid for use only with MiTek® connectors. This design is based only upon parameters shown, and is for an individual building component, not a truss system. Before use, the building designer must verify the applicability of design parameters and properly incorporate this design into the overall building design. Bracing indicated is to prevent buckling of individual truss web and/or chord members only. Additional temporary and permanent bracing is always required for stability and to prevent collapse with possible personal injury and property damage. For general guidance regarding the fabrication, storage, delivery, erection and bracing of trusses and truss systems, see ***ANSI/TPI1 Quality Criteria, DSB-89 and BCSI Building Component Safety Information*** available from Truss Plate Institute, 218 N. Lee Street, Suite 312, Alexandria, VA 22314.

MiTek USA, Inc.
400 Sunrise Avenue, Suite 270
Roseville, CA 95661

Job	Truss	Truss Type	Qty	Ply	ESPINOZA R60548645
J19-319	F05	Half Hip	1	1	Job Reference (optional)

Stockton Truss , STOCKTON, CA 95215 — 8.320 s Nov 19 2019 MiTek Industries, Inc. Tue Dec 10 13:01:17 2019 Page 1
ID:eURouH3h5RzkGDlILuCRE8yWpf_-jKoMbngG?MP3YNj4FCi_AoPkdHjAcbB0wpt5HJyAKhW

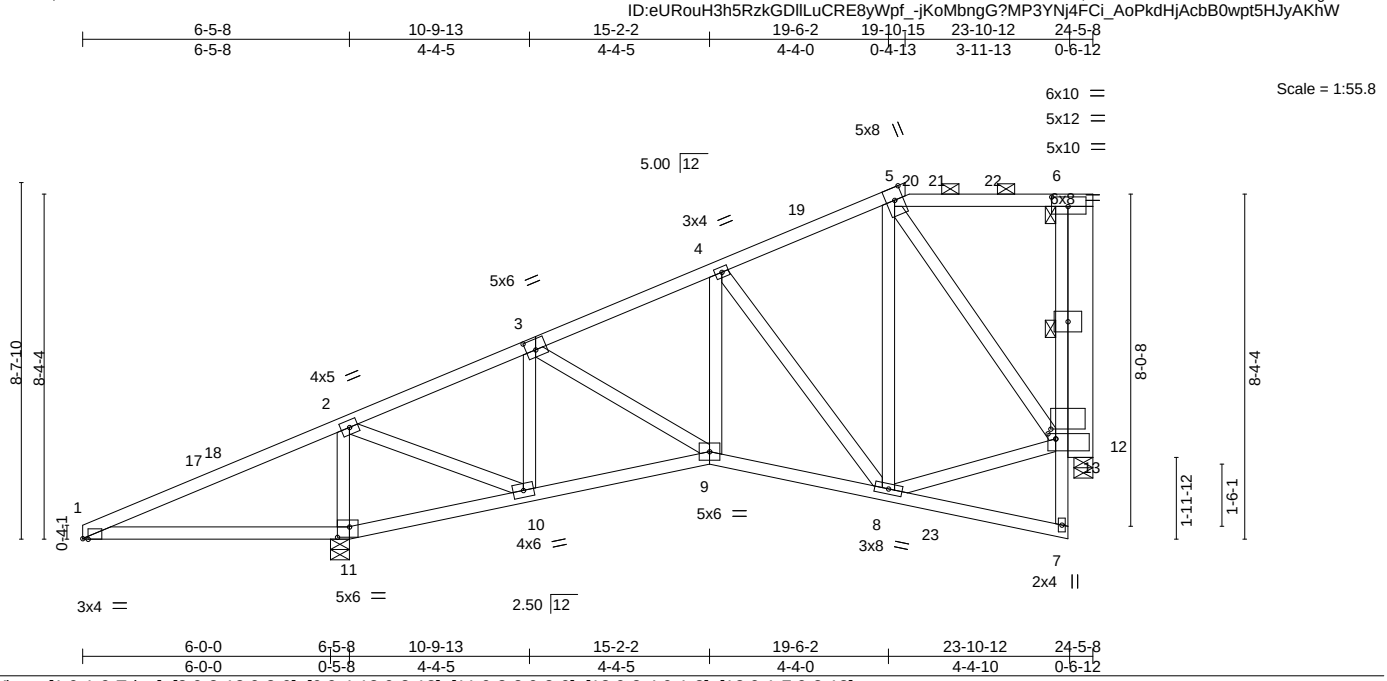

Plate Offsets (X,Y)-- [1:0-1-9,Edge], [3:0-2-12,0-3-0], [6:0-4-12,0-2-12], [11:0-3-8,0-3-0], [12:0-2-4,0-1-8], [12:0-1-7,0-2-13]

LOADING (psf)		SPACING-	2-0-0	CSI.		DEFL.	in	(loc)	l/defl	L/d	PLATES	GRIP
TCLL	30.0	Plate Grip DOL	1.15	TC	0.64	Vert(LL)	-0.04	9	>999	240	MT20	220/195
(Roof Snow=30.0)		Lumber DOL	1.15	BC	0.36	Vert(CT)	-0.09	9-10	>999	180		
TCDL	14.0	Rep Stress Incr	YES	WB	0.81	Horz(CT)	0.02	13	n/a	n/a		
BCLL	0.0 *	Code	IBC2015/TPI2014	Matrix-MSH		Wind(LL)	0.05	9-10	>999	360	Weight: 159 lb	FT = 20%
BCDL	10.0											

LUMBER-

TOP CHORD	2x4 DF No.1&Btr G
BOT CHORD	2x4 DF No.1&Btr G *Except* 6-7: 2x4 DF Std G
WEBS	2x4 DF Std G
OTHERS	2x8 DF SS

BRACING-

TOP CHORD	Structural wood sheathing directly applied or 5-8-7 oc purlins, except 2-0-0 oc purlins (6-0-0 max.): 5-6.
BOT CHORD	Rigid ceiling directly applied or 6-0-0 oc bracing. Except: 6-0-0 oc bracing: 6-13

MiTek recommends that Stabilizers and required cross bracing be installed during truss erection, in accordance with Stabilizer Installation guide.

REACTIONS. (lb/size) 11=1791/0-5-8 (min. 0-2-8), 13=1298/0-5-8 (min. 0-1-8)
Max Horz 11=330(LC 11)
Max Uplift 11=-163(LC 10), 13=-308(LC 11)
Max Grav 11=2348(LC 30), 13=1526(LC 30)

FORCES. (lb) - Max. Comp./Max. Ten. - All forces 250 (lb) or less except when shown.

TOP CHORD	1-17=-406/757, 17-18=-397/760, 2-18=-394/923, 2-3=-958/478, 3-4=-1267/599, 4-19=-695/176, 5-19=-579/186
BOT CHORD	1-11=-701/407, 10-11=-845/0, 9-10=-1061/813, 8-9=-1103/1090, 12-13=-1395/760, 6-12=-617/119
WEBS	2-11=-2011/710, 2-10=-749/1679, 3-10=-872/136, 3-9=-79/337, 4-9=-618/280, 4-8=-856/699, 5-8=-450/387, 8-12=-685/586, 5-12=-906/577

NOTES-

1) Wind: ASCE 7-10; Vult=110mph (3-second gust) Vasd=87mph; TCDL=7.2psf; BCDL=4.2psf; h=25ft; Cat. II; Exp C; Enclosed; MWFRS (envelope) and C-C Exterior(2) 0-0-0 to 3-0-0, Interior(1) 3-0-0 to 19-7-14, Exterior(2) 19-7-14 to 23-8-8 zone; cantilever left and right exposed ; porch left and right exposed;C-C for members and forces & MWFRS for reactions shown; Lumber DOL=1.33 plate grip DOL=1.33
2) TCLL: ASCE 7-10; Pf=30.0 psf (flat roof snow); Category II; Exp C; Partially Exp.; Ct=1.00
3) Unbalanced snow loads have been considered for this design.
4) Provide adequate drainage to prevent water ponding.
5) This truss has been designed for a 10.0 psf bottom chord live load nonconcurrent with any other live loads.
6) * This truss has been designed for a live load of 20.0psf on the bottom chord in all areas where a rectangle 3-6-0 tall by 2-0-0 wide will fit between the bottom chord and any other members.
7) A plate rating reduction of 20% has been applied for the green lumber members.
8) Bearing at joint(s) 13 considers parallel to grain value using ANSI/TPI 1 angle to grain formula. Building designer should verify capacity of bearing surface.
9) Provide mechanical connection (by others) of truss to bearing plate capable of withstanding 163 lb uplift at joint 11 and 308 lb uplift at joint 13.
10) Graphical purlin representation does not depict the size or the orientation of the purlin along the top and/or bottom chord.
11) Hanger(s) or other connection device(s) shall be provided sufficient to support concentrated load(s) 287 lb down and 112 lb up at 20-0-12, and 181 lb down and 79 lb up at 22-0-12, and 413 lb down and 138 lb up at 23-8-8 on top chord. The design/selection of such connection device(s) is the responsibility of others.
12) This truss is designed for a creep factor of 3.01, which is used to calculate the Vert(CT) deflection per ANSI/TPI 1.

Continued on page 2

REGISTERED PROFESSIONAL ENGINEER
EDUARD TEODOSESCU
C 75435
EXP. 03/31/2020
STATE OF CALIFORNIA

December 11,2019

WARNING - Verify design parameters and READ NOTES ON THIS AND INCLUDED MITEK REFERENCE PAGE MII-7473 rev. 10/03/2015 BEFORE USE.
Design valid for use only with MiTek® connectors. This design is based only upon parameters shown, and is for an individual building component, not a truss system. Before use, the building designer must verify the applicability of design parameters and properly incorporate this design into the overall building design. Bracing indicated is to prevent buckling of individual truss web and/or chord members only. Additional temporary and permanent bracing is always required for stability and to prevent collapse with possible personal injury and property damage. For general guidance regarding the fabrication, storage, delivery, erection and bracing of trusses and truss systems, see ***ANSI/TPI1 Quality Criteria, DSB-89 and BCSI Building Component Safety Information*** available from Truss Plate Institute, 218 N. Lee Street, Suite 312, Alexandria, VA 22314.

MiTek USA, Inc.
400 Sunrise Avenue, Suite 270
Roseville, CA 95661

LOAD CASE(S) Standard

1) Dead + Snow (balanced): Lumber Increase=1.15, Plate Increase=1.15
   Uniform Loads (plf)
   Vert: 1-5=-88, 5-6=-88, 11-14=-20, 9-11=-20, 7-9=-20
   Concentrated Loads (lb)
   Vert: 6=-345 20=-117 22=-67

WARNING - Verify design parameters and READ NOTES ON THIS AND INCLUDED MITEK REFERENCE PAGE MII-7473 rev. 10/03/2015 BEFORE USE.
Design valid for use only with MiTek® connectors. This design is based only upon parameters shown, and is for an individual building component, not a truss system. Before use, the building designer must verify the applicability of design parameters and properly incorporate this design into the overall building design. Bracing indicated is to prevent buckling of individual truss web and/or chord members only. Additional temporary and permanent bracing is always required for stability and to prevent collapse with possible personal injury and property damage. For general guidance regarding the fabrication, storage, delivery, erection and bracing of trusses and truss systems, see ***ANSI/TPI1 Quality Criteria, DSB-89 and BCSI Building Component Safety Information*** available from Truss Plate Institute, 218 N. Lee Street, Suite 312, Alexandria, VA 22314.

MiTek USA, Inc.
400 Sunrise Avenue, Suite 270
Roseville, CA 95661

Job	Truss	Truss Type	Qty	Ply	ESPINOZA R60548646
J19-319	F06	Half Hip	1	1	Job Reference (optional)

Stockton Truss, STOCKTON, CA 95215 8.330 s Dec 5 2019 MiTek Industries, Inc. Tue Dec 10 11:43:40 2019 Page 1

ID:eURouH3h5RzkGDllLuCRE8yWpf_-FEduu9ctLgU?2l5Fqg0iuOpQwewH_1CmPcAAc3yANan

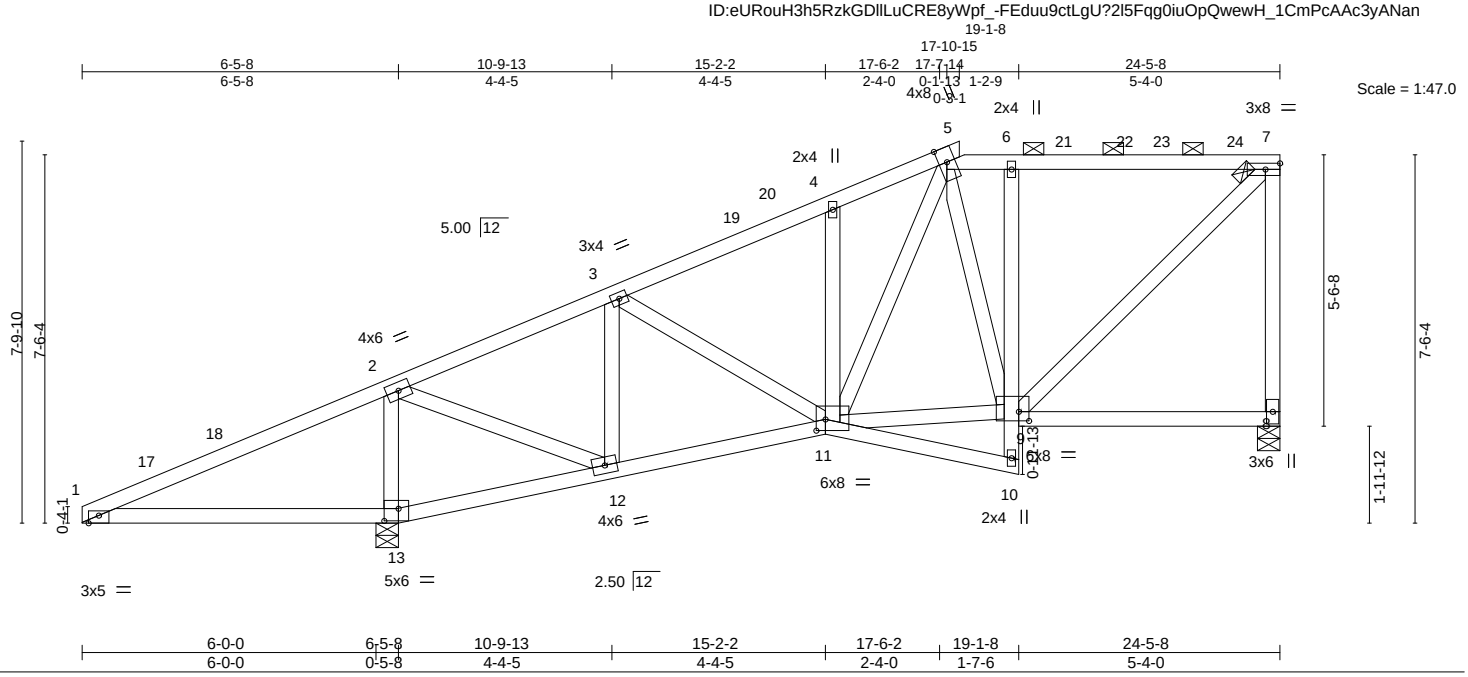

Plate Offsets (X,Y)-- [1:0-2-8,Edge], [9:0-2-8,0-2-4], [11:0-2-4,0-2-12], [13:0-3-8,0-3-0]

LOADING (psf)		SPACING-	2-0-0	CSI.		DEFL.	in	(loc)	l/defl	L/d	PLATES	GRIP
TCLL	30.0	Plate Grip DOL	1.15	TC	0.83	Vert(LL)	-0.05	11	>999	240	MT20	220/195
(Roof Snow=30.0)		Lumber DOL	1.15	BC	0.48	Vert(CT)	-0.09	11-12	>999	180		
TCDL	14.0	Rep Stress Incr	YES	WB	0.79	Horz(CT)	0.02	8	n/a	n/a		
BCLL	0.0 *	Code	IBC2015/TPI2014	Matrix-MSH		Wind(LL)	0.05	8-9	>999	360	Weight: 141 lb	FT = 20%
BCDL	10.0											

LUMBER-

TOP CHORD 2x4 DF No.1&Btr G

BOT CHORD 2x4 DF No.1&Btr G *Except*
6-10: 2x4 DF Std G

WEBS 2x4 DF Std G

BRACING-

TOP CHORD Structural wood sheathing directly applied or 5-5-0 oc purlins, except end verticals, and 2-0-0 oc purlins (5-11-7 max.): 5-7.

BOT CHORD Rigid ceiling directly applied or 6-0-0 oc bracing.

REACTIONS. (lb/size) 8=1030/0-5-8, 13=1858/0-5-8
Max Horz 13=190(LC 47)
Max Uplift 8=-225(LC 11), 13=-218(LC 10)
Max Grav 8=1166(LC 29), 13=2502(LC 29)

FORCES. (lb) - Max. Comp./Max. Ten. - All forces 250 (lb) or less except when shown.

TOP CHORD 1-2=-406/1060, 2-3=-942/527, 3-4=-1306/671, 4-5=-1298/735, 5-6=-926/490, 6-7=-881/477, 7-8=-1108/520

BOT CHORD 1-13=-817/407, 12-13=-969/78, 11-12=-703/764, 6-9=-865/193

WEBS 2-13=-2123/742, 2-12=-796/1795, 3-12=-934/162, 3-11=-109/419, 4-11=-556/122, 5-11=-477/599, 9-11=-526/814, 5-9=-138/296, 7-9=-656/1204

NOTES-

1) Wind: ASCE 7-10; Vult=110mph (3-second gust) Vasd=87mph; TCDL=7.2psf; BCDL=4.2psf; h=25ft; Cat. II; Exp C; Enclosed; MWFRS (envelope) and C-C Exterior(2) 0-0-0 to 3-0-0, Interior(1) 3-0-0 to 17-9-10, Exterior(2) 17-9-10 to 22-0-8, Interior(1) 22-0-8 to 24-3-12 zone; cantilever left and right exposed ; porch left and right exposed;C-C for members and forces & MWFRS for reactions shown; Lumber DOL=1.33 plate grip DOL=1.33
2) TCLL: ASCE 7-10; Pf=30.0 psf (flat roof snow); Category II; Exp C; Partially Exp.; Ct=1.00
3) Unbalanced snow loads have been considered for this design.
4) Provide adequate drainage to prevent water ponding.
5) This truss has been designed for a 10.0 psf bottom chord live load nonconcurrent with any other live loads.
6) * This truss has been designed for a live load of 20.0psf on the bottom chord in all areas where a rectangle 3-6-0 tall by 2-0-0 wide will fit between the bottom chord and any other members.
7) A plate rating reduction of 20% has been applied for the green lumber members.
8) Provide mechanical connection (by others) of truss to bearing plate capable of withstanding 100 lb uplift at joint(s) except (jt=lb) 8=225, 13=218.
9) Graphical purlin representation does not depict the size or the orientation of the purlin along the top and/or bottom chord.
10) Hanger(s) or other connection device(s) shall be provided sufficient to support concentrated load(s) 230 lb down and 115 lb up at 17-9-10, 143 lb down and 81 lb up at 20-0-12, and 155 lb down and 84 lb up at 22-0-12, and 86 lb down and 59 lb up at 23-6-12 on top chord. The design/selection of such connection device(s) is the responsibility of others.
11) This truss is designed for a creep factor of 3.01, which is used to calculate the Vert(CT) deflection per ANSI/TPI 1.

LOAD CASE(S) Standard

December 11,2019

Continued on page 2

WARNING - Verify design parameters and READ NOTES ON THIS AND INCLUDED MITEK REFERENCE PAGE MII-7473 rev. 10/03/2015 BEFORE USE.
Design valid for use only with MiTek® connectors. This design is based only upon parameters shown, and is for an individual building component, not a truss system. Before use, the building designer must verify the applicability of design parameters and properly incorporate this design into the overall building design. Bracing indicated is to prevent buckling of individual truss web and/or chord members only. Additional temporary and permanent bracing is always required for stability and to prevent collapse with possible personal injury and property damage. For general guidance regarding the fabrication, storage, delivery, erection and bracing of trusses and truss systems, see ***ANSI/TPI1 Quality Criteria, DSB-89 and BCSI Building Component Safety Information*** available from Truss Plate Institute, 218 N. Lee Street, Suite 312, Alexandria, VA 22314.

MiTek USA, Inc.
400 Sunrise Avenue, Suite 270
Roseville, CA 95661

LOAD CASE(S) Standard

1) Dead + Snow (balanced): Lumber Increase=1.15, Plate Increase=1.15
   Uniform Loads (plf)
   Vert: 1-5=-88, 5-7=-88, 13-14=-20, 11-13=-20, 10-11=-20, 8-9=-20
   Concentrated Loads (lb)
   Vert: 5=-127 21=-62 23=-71 24=-2

WARNING - Verify design parameters and READ NOTES ON THIS AND INCLUDED MITEK REFERENCE PAGE MII-7473 rev. 10/03/2015 BEFORE USE.
Design valid for use only with MiTek® connectors. This design is based only upon parameters shown, and is for an individual building component, not a truss system. Before use, the building designer must verify the applicability of design parameters and properly incorporate this design into the overall building design. Bracing indicated is to prevent buckling of individual truss web and/or chord members only. Additional temporary and permanent bracing is always required for stability and to prevent collapse with possible personal injury and property damage. For general guidance regarding the fabrication, storage, delivery, erection and bracing of trusses and truss systems, see ***ANSI/TPI1 Quality Criteria, DSB-89 and BCSI Building Component Safety Information*** available from Truss Plate Institute, 218 N. Lee Street, Suite 312, Alexandria, VA 22314.

MiTek USA, Inc.
400 Sunrise Avenue, Suite 270
Roseville, CA 95661

Job	Truss	Truss Type	Qty	Ply	ESPINOZA R60548647
J19-319	F07	Half Hip	1	1	Job Reference (optional)

Stockton Truss, STOCKTON, CA 95215 8.330 s Dec 5 2019 MiTek Industries, Inc. Tue Dec 10 11:43:43 2019 Page 1
ID:eURouH3h5RzkGDllLuCRE8yWpf_-fpI1XBemebsavCqqWpZPW0RxHsxdBN9C5aPqDOyANak

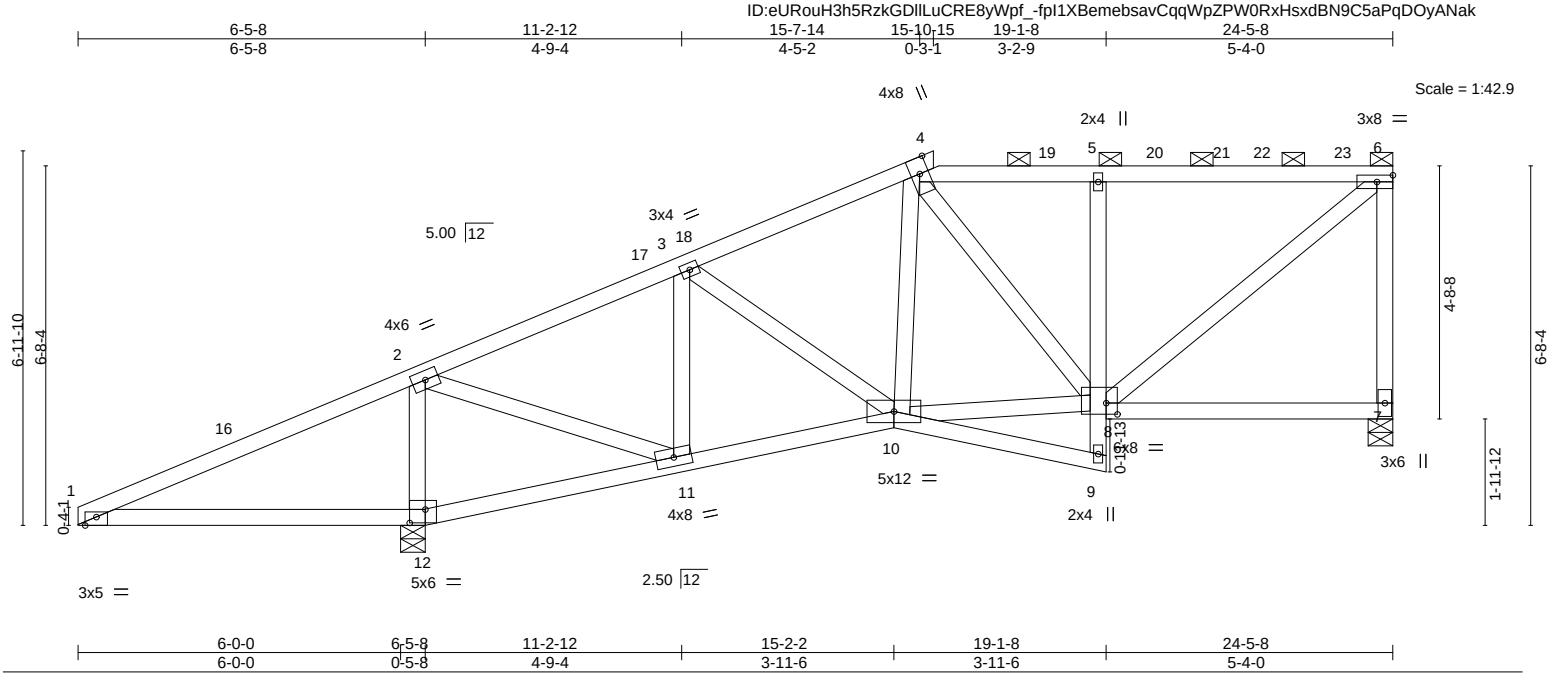

Plate Offsets (X,Y)-- [1:0-2-8,Edge], [8:0-2-8,0-2-8], [12:0-3-8,0-3-0]

LOADING (psf)		SPACING-	2-0-0	CSI.		DEFL.	in	(loc)	l/defl	L/d	PLATES	GRIP
TCLL	30.0	Plate Grip DOL	1.15	TC	0.76	Vert(LL)	-0.04	10-11	>999	240	MT20	220/195
(Roof Snow=30.0)		Lumber DOL	1.15	BC	0.50	Vert(CT)	-0.09	7-8	>999	180		
TCDL	14.0	Rep Stress Incr	YES	WB	0.84	Horz(CT)	0.02	7	n/a	n/a		
BCLL	0.0 *	Code	IBC2015/TPI2014	Matrix-MSH		Wind(LL)	0.05	7-8	>999	360	Weight: 131 lb	FT = 20%
BCDL	10.0											

LUMBER-
TOP CHORD 2x4 DF No.1&Btr G
BOT CHORD 2x4 DF No.1&Btr G *Except*
5-9: 2x4 DF Std G
WEBS 2x4 DF Std G

BRACING-
TOP CHORD Structural wood sheathing directly applied or 5-7-3 oc purlins, except end verticals, and 2-0-0 oc purlins (5-9-2 max.): 4-6.
BOT CHORD Rigid ceiling directly applied or 5-6-13 oc bracing.

REACTIONS. (lb/size) 7=1072/0-5-8, 12=1888/0-5-8
Max Horz 12=174(LC 11)
Max Uplift 7=-239(LC 11), 12=-236(LC 10)
Max Grav 7=1158(LC 28), 12=2590(LC 29)

FORCES. (lb) - Max. Comp./Max. Ten. - All forces 250 (lb) or less except when shown.
TOP CHORD 1-2=-404/1231, 2-3=-926/586, 3-4=-1182/689, 4-5=-963/550, 5-6=-964/552, 6-7=-1100/504
BOT CHORD 1-12=-970/405, 11-12=-1129/103, 10-11=-727/742, 5-8=-772/140
WEBS 2-12=-2170/738, 2-11=-837/1910, 3-11=-925/149, 3-10=-75/324, 4-10=-334/105, 8-10=-642/902, 6-8=-700/1213

NOTES-
1) Wind: ASCE 7-10; Vult=110mph (3-second gust) Vasd=87mph; TCDL=7.2psf; BCDL=4.2psf; h=25ft; Cat. II; Exp C; Enclosed; MWFRS (envelope) and C-C Exterior(2) 0-0-0 to 3-0-0, Interior(1) 3-0-0 to 15-9-10, Exterior(2) 15-9-10 to 20-0-8, Interior(1) 20-0-8 to 24-3-12 zone; cantilever left and right exposed ; porch left and right exposed;C-C for members and forces & MWFRS for reactions shown; Lumber DOL=1.33 plate grip DOL=1.33
2) TCLL: ASCE 7-10; Pf=30.0 psf (flat roof snow); Category II; Exp C; Partially Exp.; Ct=1.00
3) Unbalanced snow loads have been considered for this design.
4) Provide adequate drainage to prevent water ponding.
5) This truss has been designed for a 10.0 psf bottom chord live load nonconcurrent with any other live loads.
6) * This truss has been designed for a live load of 20.0psf on the bottom chord in all areas where a rectangle 3-6-0 tall by 2-0-0 wide will fit between the bottom chord and any other members.
7) A plate rating reduction of 20% has been applied for the green lumber members.
8) Provide mechanical connection (by others) of truss to bearing plate capable of withstanding 100 lb uplift at joint(s) except (jt=lb) 7=239, 12=236.
9) Graphical purlin representation does not depict the size or the orientation of the purlin along the top and/or bottom chord.
10) Hanger(s) or other connection device(s) shall be provided sufficient to support concentrated load(s) 226 lb down and 115 lb up at 15-9-10, 136 lb down and 81 lb up at 18-0-12, 146 lb down and 84 lb up at 20-0-12, and 120 lb down and 84 lb up at 22-0-12, and 131 lb down and 81 lb up at 23-6-12 on top chord. The design/selection of such connection device(s) is the responsibility of others.
11) This truss is designed for a creep factor of 3.01, which is used to calculate the Vert(CT) deflection per ANSI/TPI 1.

LOAD CASE(S) Standard

December 11,2019

Continued on page 2

WARNING - Verify design parameters and READ NOTES ON THIS AND INCLUDED MITEK REFERENCE PAGE MII-7473 rev. 10/03/2015 BEFORE USE.
Design valid for use only with MiTek® connectors. This design is based only upon parameters shown, and is for an individual building component, not a truss system. Before use, the building designer must verify the applicability of design parameters and properly incorporate this design into the overall building design. Bracing indicated is to prevent buckling of individual truss web and/or chord members only. Additional temporary and permanent bracing is always required for stability and to prevent collapse with possible personal injury and property damage. For general guidance regarding the fabrication, storage, delivery, erection and bracing of trusses and truss systems, see ***ANSI/TPI1 Quality Criteria, DSB-89 and BCSI Building Component Safety Information*** available from Truss Plate Institute, 218 N. Lee Street, Suite 312, Alexandria, VA 22314.

MiTek USA, Inc.
400 Sunrise Avenue, Suite 270
Roseville, CA 95661

LOAD CASE(S) Standard

1) Dead + Snow (balanced): Lumber Increase=1.15, Plate Increase=1.15
   Uniform Loads (plf)
   Vert: 1-4=-88, 4-6=-88, 12-13=-20, 10-12=-20, 9-10=-20, 7-8=-20
   Concentrated Loads (lb)
   Vert: 4=-124 19=-55 20=-62 22=-36 23=-58

WARNING - Verify design parameters and READ NOTES ON THIS AND INCLUDED MITEK REFERENCE PAGE MII-7473 rev. 10/03/2015 BEFORE USE.
Design valid for use only with MiTek® connectors. This design is based only upon parameters shown, and is for an individual building component, not a truss system. Before use, the building designer must verify the applicability of design parameters and properly incorporate this design into the overall building design. Bracing indicated is to prevent buckling of individual truss web and/or chord members only. Additional temporary and permanent bracing is always required for stability and to prevent collapse with possible personal injury and property damage. For general guidance regarding the fabrication, storage, delivery, erection and bracing of trusses and truss systems, see ***ANSI/TPI1 Quality Criteria, DSB-89 and BCSI Building Component Safety Information*** available from Truss Plate Institute, 218 N. Lee Street, Suite 312, Alexandria, VA 22314.

MiTek USA, Inc.
400 Sunrise Avenue, Suite 270
Roseville, CA 95661

Job	Truss	Truss Type	Qty	Ply	ESPINOZA R60548648
J19-319	F08	Half Hip	1	1	Job Reference (optional)

Stockton Truss, STOCKTON, CA 95215 8.330 s Dec 5 2019 MiTek Industries, Inc. Tue Dec 10 11:43:45 2019 Page 1

ID:eURouH3h5RzkGDllLuCRE8yWpf_-cBQnxtg0AC6I8W_DdEbtbRXHtfd_fKeVYtuxIGyANai

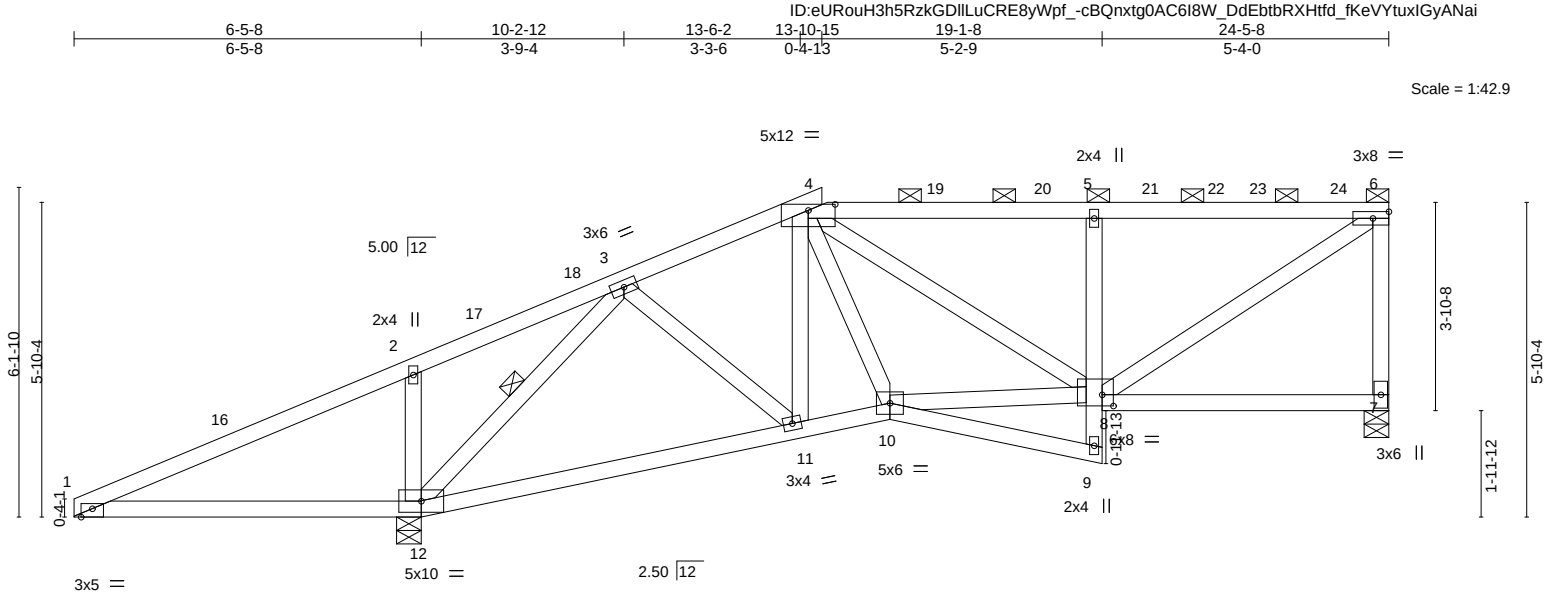

Plate Offsets (X,Y)-- [1:0-2-8,Edge], [4:0-6-0,0-1-6], [8:0-2-8,0-2-8]

LOADING (psf)		SPACING-	2-0-0	CSI.		DEFL.	in	(loc)	l/defl	L/d	PLATES	GRIP
TCLL	30.0	Plate Grip DOL	1.15	TC	0.75	Vert(LL)	-0.05	11-12	>999	240	MT20	220/195
(Roof Snow=30.0)		Lumber DOL	1.15	BC	0.51	Vert(CT)	-0.15	11-12	>999	180		
TCDL	14.0	Rep Stress Incr	YES	WB	0.65	Horz(CT)	0.03	7	n/a	n/a		
BCLL	0.0 *	Code	IBC2015/TPI2014	Matrix-MSH		Wind(LL)	0.13	11-12	>999	360	Weight: 129 lb	FT = 20%
BCDL	10.0											

LUMBER-

TOP CHORD 2x4 DF No.1&Btr G
BOT CHORD 2x4 DF No.1&Btr G *Except*
5-9: 2x4 DF Std G
WEBS 2x4 DF Std G

BRACING-

TOP CHORD Structural wood sheathing directly applied or 6-0-0 oc purlins, except end verticals, and 2-0-0 oc purlins (5-3-2 max.): 4-6.
BOT CHORD Rigid ceiling directly applied or 5-6-4 oc bracing.
WEBS 1 Row at midpt 3-12

REACTIONS. (lb/size) 7=854/0-5-8, 12=1809/0-5-8
Max Horz 12=158(LC 10)
Max Uplift 7=-211(LC 11), 12=-212(LC 10)
Max Grav 7=1191(LC 28), 12=2428(LC 29)

FORCES. (lb) - Max. Comp./Max. Ten. - All forces 250 (lb) or less except when shown.
TOP CHORD 1-2=-387/1237, 2-3=-306/1176, 3-4=-1004/746, 4-5=-1270/657, 5-6=-1264/660, 6-7=-1130/489
BOT CHORD 1-12=-977/390, 11-12=-593/505, 10-11=-757/951, 5-8=-892/143
WEBS 2-12=-810/160, 3-12=-1961/885, 3-11=-390/570, 4-11=-339/23, 8-10=-757/932, 4-8=-6/452, 6-8=-775/1475

NOTES-

1) Wind: ASCE 7-10; Vult=110mph (3-second gust) Vasd=87mph; TCDL=7.2psf; BCDL=4.2psf; h=25ft; Cat. II; Exp C; Enclosed; MWFRS (envelope) and C-C Exterior(2) 0-0-0 to 3-0-0, Interior(1) 3-0-0 to 13-9-10, Exterior(2) 13-9-10 to 18-0-8, Interior(1) 18-0-8 to 24-3-12 zone; cantilever left and right exposed ; porch left and right exposed;C-C for members and forces & MWFRS for reactions shown; Lumber DOL=1.33 plate grip DOL=1.33
2) TCLL: ASCE 7-10; Pf=30.0 psf (flat roof snow); Category II; Exp C; Partially Exp.; Ct=1.00
3) Unbalanced snow loads have been considered for this design.
4) Provide adequate drainage to prevent water ponding.
5) This truss has been designed for a 10.0 psf bottom chord live load nonconcurrent with any other live loads.
6) * This truss has been designed for a live load of 20.0psf on the bottom chord in all areas where a rectangle 3-6-0 tall by 2-0-0 wide will fit between the bottom chord and any other members.
7) A plate rating reduction of 20% has been applied for the green lumber members.
8) Provide mechanical connection (by others) of truss to bearing plate capable of withstanding 100 lb uplift at joint(s) except (jt=lb) 7=211, 12=212.
9) Graphical purlin representation does not depict the size or the orientation of the purlin along the top and/or bottom chord.
10) Hanger(s) or other connection device(s) shall be provided sufficient to support concentrated load(s) 139 lb down and 234 lb up at 13-9-10, 51 lb down and 41 lb up at 16-0-12, 54 lb down and 44 lb up at 18-0-12, 85 lb down and 76 lb up at 20-0-12, and 69 lb down and 76 lb up at 22-0-12, and 73 lb down and 73 lb up at 23-6-12 on top chord. The design/selection of such connection device(s) is the responsibility of others.
11) This truss is designed for a creep factor of 3.01, which is used to calculate the Vert(CT) deflection per ANSI/TPI 1.

LOAD CASE(S) Standard

December 11,2019

Continued on page 2

WARNING - Verify design parameters and READ NOTES ON THIS AND INCLUDED MITEK REFERENCE PAGE MII-7473 rev. 10/03/2015 BEFORE USE.
Design valid for use only with MiTek® connectors. This design is based only upon parameters shown, and is for an individual building component, not a truss system. Before use, the building designer must verify the applicability of design parameters and properly incorporate this design into the overall building design. Bracing indicated is to prevent buckling of individual truss web and/or chord members only. Additional temporary and permanent bracing is always required for stability and to prevent collapse with possible personal injury and property damage. For general guidance regarding the fabrication, storage, delivery, erection and bracing of trusses and truss systems, see ***ANSI/TPI1 Quality Criteria, DSB-89 and BCSI Building Component Safety Information*** available from Truss Plate Institute, 218 N. Lee Street, Suite 312, Alexandria, VA 22314.

MiTek USA, Inc.
400 Sunrise Avenue, Suite 270
Roseville, CA 95661

LOAD CASE(S) Standard

1) Dead + Snow (balanced): Lumber Increase=1.15, Plate Increase=1.15
   Uniform Loads (plf)
   Vert: 1-4=-88, 4-6=-88, 12-13=-20, 10-12=-20, 9-10=-20, 7-8=-20
   Concentrated Loads (lb)
   Vert: 4=-36 21=-1

WARNING - Verify design parameters and READ NOTES ON THIS AND INCLUDED MITEK REFERENCE PAGE MII-7473 rev. 10/03/2015 BEFORE USE.
Design valid for use only with MiTek® connectors. This design is based only upon parameters shown, and is for an individual building component, not a truss system. Before use, the building designer must verify the applicability of design parameters and properly incorporate this design into the overall building design. Bracing indicated is to prevent buckling of individual truss web and/or chord members only. Additional temporary and permanent bracing is always required for stability and to prevent collapse with possible personal injury and property damage. For general guidance regarding the fabrication, storage, delivery, erection and bracing of trusses and truss systems, see ***ANSI/TPI1 Quality Criteria, DSB-89 and BCSI Building Component Safety Information*** available from Truss Plate Institute, 218 N. Lee Street, Suite 312, Alexandria, VA 22314.

MiTek USA, Inc.
400 Sunrise Avenue, Suite 270
Roseville, CA 95661

Job	Truss	Truss Type	Qty	Ply	ESPINOZA R60548649
J19-319	F09	Half Hip Girder	1	1	Job Reference (optional)

Stockton Truss, STOCKTON, CA 95215 8.330 s Dec 5 2019 MiTek Industries, Inc. Tue Dec 10 11:43:48 2019 Page 1
ID:eURouH3h5RzkGDllLuCRE8yWpf_-0m6waviuT7Us?zioIM9aD49mgtW8sg4xFr6bvbyANaf

3-9-5	6-5-8	9-2-12	11-3-10	11-10-15	15-2-2	15-6-12	19-1-8	24-5-8
3-9-5	2-8-4	2-9-4	2-0-14	0-7-5	3-3-3	0-4-10	3-6-12	5-4-0

Scale = 1:42.9

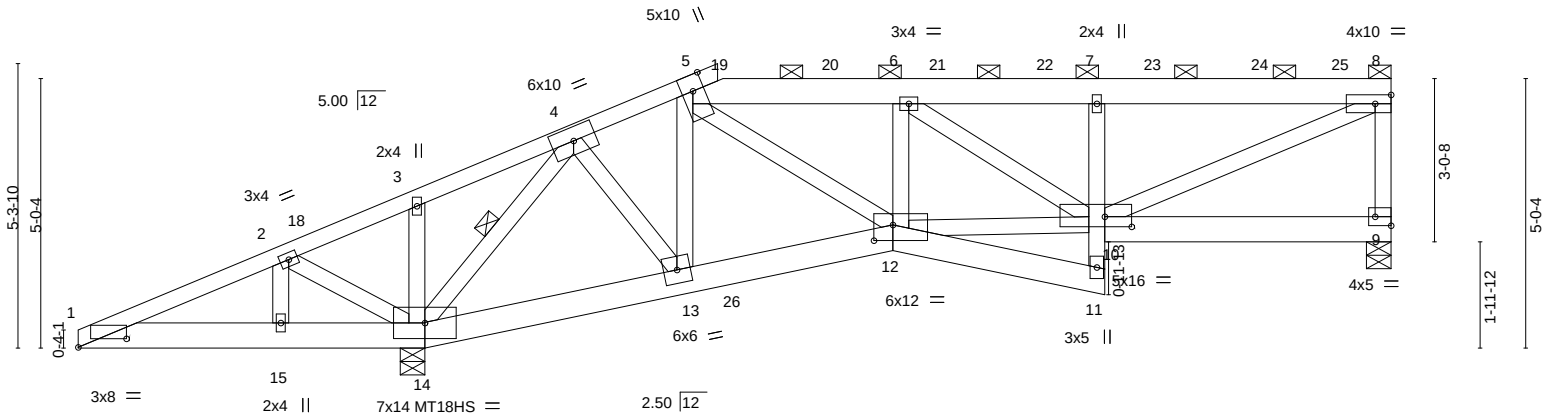

3-9-5	6-0-0	6-5-8	11-3-10	15-2-2	19-1-8	24-5-8
3-9-5	2-2-11	0-5-8	4-10-2	3-10-8	3-11-6	5-4-0

Plate Offsets (X,Y)-- [1:0-10-12,0-1-15], [9:Edge,0-2-0], [10:0-6-0,0-2-4], [12:0-4-4,0-3-8]

LOADING (psf)		SPACING-	2-0-0	CSI.		DEFL.	in	(loc)	l/defl	L/d	PLATES	GRIP
TCLL	30.0	Plate Grip DOL	1.15	TC	0.84	Vert(LL)	-0.09	12	>999	240	MT20	220/195
(Roof Snow=30.0)		Lumber DOL	1.15	BC	0.99	Vert(CT)	-0.20	12	>999	180	MT18HS	220/195
TCDL	14.0	Rep Stress Incr	NO	WB	0.74	Horz(CT)	0.06	9	n/a	n/a		
BCLL	0.0 *	Code	IBC2015/TPI2014	Matrix-MSH		Wind(LL)	0.06	12	>999	360	Weight: 158 lb	FT = 20%
BCDL	10.0											

LUMBER-
TOP CHORD 2x4 DF No.1&Btr G *Except* 5-8: 2x6 DF SS G
BOT CHORD 2x6 DF SS G *Except* 7-11: 2x4 DF Std G
WEBS 2x4 DF Std G *Except* 4-13,5-12,10-12,8-10: 2x4 DF No.1&Btr G

BRACING-
TOP CHORD Structural wood sheathing directly applied or 5-8-14 oc purlins, except end verticals, and 2-0-0 oc purlins (4-1-11 max.): 5-8.
BOT CHORD Rigid ceiling directly applied or 4-10-6 oc bracing.
WEBS 1 Row at midpt 4-14

REACTIONS. (lb/size) 9=2141/0-5-8, 14=4330/0-5-8
Max Horz 14=141(LC 7)
Max Uplift 9=-232(LC 9), 14=-822(LC 6)
Max Grav 9=2240(LC 23), 14=4906(LC 25)

FORCES. (lb) - Max. Comp./Max. Ten. - All forces 250 (lb) or less except when shown.
TOP CHORD 1-2=-556/3301, 2-3=-606/3873, 3-4=-586/3885, 4-5=-1301/1455, 5-6=-3195/1077, 6-7=-3138/636, 7-8=-3175/631, 8-9=-2141/229
BOT CHORD 1-15=-2972/526, 14-15=-2972/526, 13-14=-1913/583, 12-13=-1362/1351, 11-12=-94/353, 7-10=-1266/0
WEBS 2-14=-619/84, 3-14=-461/54, 4-14=-4843/912, 4-13=-519/2402, 5-13=-2205/340, 5-12=-237/2378, 6-12=-1247/25, 10-12=-1007/2911, 6-10=-145/639, 8-10=-699/3424

NOTES-
1) Wind: ASCE 7-10; Vult=110mph (3-second gust) Vasd=87mph; TCDL=7.2psf; BCDL=4.2psf; h=25ft; Cat. II; Exp C; Enclosed; MWFRS (envelope); cantilever left and right exposed ; porch left and right exposed; Lumber DOL=1.33 plate grip DOL=1.33
2) TCLL: ASCE 7-10; Pf=30.0 psf (flat roof snow); Category II; Exp C; Partially Exp.; Ct=1.00
3) Unbalanced snow loads have been considered for this design.
4) Provide adequate drainage to prevent water ponding.
5) All plates are MT20 plates unless otherwise indicated.
6) This truss has been designed for a 10.0 psf bottom chord live load nonconcurrent with any other live loads.
7) * This truss has been designed for a live load of 20.0psf on the bottom chord in all areas where a rectangle 3-6-0 tall by 2-0-0 wide will fit between the bottom chord and any other members.
8) A plate rating reduction of 20% has been applied for the green lumber members.
9) Provide mechanical connection (by others) of truss to bearing plate capable of withstanding 100 lb uplift at joint(s) except (jt=lb) 9=232, 14=822.
10) Graphical purlin representation does not depict the size or the orientation of the purlin along the top and/or bottom chord.
11) Hanger(s) or other connection device(s) shall be provided sufficient to support concentrated load(s) 975 lb down and 189 lb up at 0-0-0, 350 lb down and 68 lb up at 12-0-0, 477 lb down and 324 lb up at 12-0-12, 542 lb down and 93 lb up at 14-0-12, 514 lb down and 88 lb up at 16-0-12, and 490 lb down and 81 lb up at 18-0-12, and 361 lb down and 48 lb up at 20-0-12 on top chord, and 148 lb up at 12-0-12 on bottom chord. The design/selection of such connection device(s) is the responsibility of others.
12) This truss is designed for a creep factor of 3.01, which is used to calculate the Vert(CT) deflection per ANSI/TPI 1.
13) In the LOAD CASE(S) section, loads applied to the face of the truss are noted as front (F) or back (B).

Continued on page 2

REGISTERED PROFESSIONAL ENGINEER EDUARD TEODOSESCU C 75435 EXP. 03/31/2020 STATE OF CALIFORNIA

December 11,2019

LOAD CASE(S) Standard

⚠ *WARNING - Verify design parameters and READ NOTES ON THIS AND INCLUDED MITEK REFERENCE PAGE MII-7473 rev. 10/03/2015 BEFORE USE.*
Design valid for use only with MiTek® connectors. This design is based only upon parameters shown, and is for an individual building component, not a truss system. Before use, the building designer must verify the applicability of design parameters and properly incorporate this design into the overall building design. Bracing indicated is to prevent buckling of individual truss web and/or chord members only. Additional temporary and permanent bracing is always required for stability and to prevent collapse with possible personal injury and property damage. For general guidance regarding the fabrication, storage, delivery, erection and bracing of trusses and truss systems, see ***ANSI/TPI1 Quality Criteria, DSB-89 and BCSI Building Component Safety Information*** available from Truss Plate Institute, 218 N. Lee Street, Suite 312, Alexandria, VA 22314.

MiTek USA, Inc.
400 Sunrise Avenue, Suite 270
Roseville, CA 95661

LOAD CASE(S) Standard

1) Dead + Snow (balanced): Lumber Increase=1.15, Plate Increase=1.15
   Uniform Loads (plf)
   Vert: 1-5=-88, 5-8=-88, 1-14=-20, 12-14=-20, 11-12=-20, 9-10=-20
   Concentrated Loads (lb)
   Vert: 1=-975(F) 19=-738(F=-350) 20=-462 21=-430 22=-406 23=-277 24=-277 25=-299 26=19(B)

WARNING - Verify design parameters and READ NOTES ON THIS AND INCLUDED MITEK REFERENCE PAGE MII-7473 rev. 10/03/2015 BEFORE USE.
Design valid for use only with MiTek® connectors. This design is based only upon parameters shown, and is for an individual building component, not a truss system. Before use, the building designer must verify the applicability of design parameters and properly incorporate this design into the overall building design. Bracing indicated is to prevent buckling of individual truss web and/or chord members only. Additional temporary and permanent bracing is always required for stability and to prevent collapse with possible personal injury and property damage. For general guidance regarding the fabrication, storage, delivery, erection and bracing of trusses and truss systems, see ***ANSI/TPI1 Quality Criteria, DSB-89 and BCSI Building Component Safety Information*** available from Truss Plate Institute, 218 N. Lee Street, Suite 312, Alexandria, VA 22314.

MiTek USA, Inc.
400 Sunrise Avenue, Suite 270
Roseville, CA 95661

Job	Truss	Truss Type	Qty	Ply	ESPINOZA R60548650
J19-319	G01	Common	1	1	Job Reference (optional)

Stockton Truss, STOCKTON, CA 95215 8.330 s Dec 5 2019 MiTek Industries, Inc. Tue Dec 10 11:43:49 2019 Page 1
ID:eURouH3h5RzkGDllLuCRE8yWpf_-UzgInEjWDRcjd7H_s3gplHh1MH38bEU5TVs8R1yANae

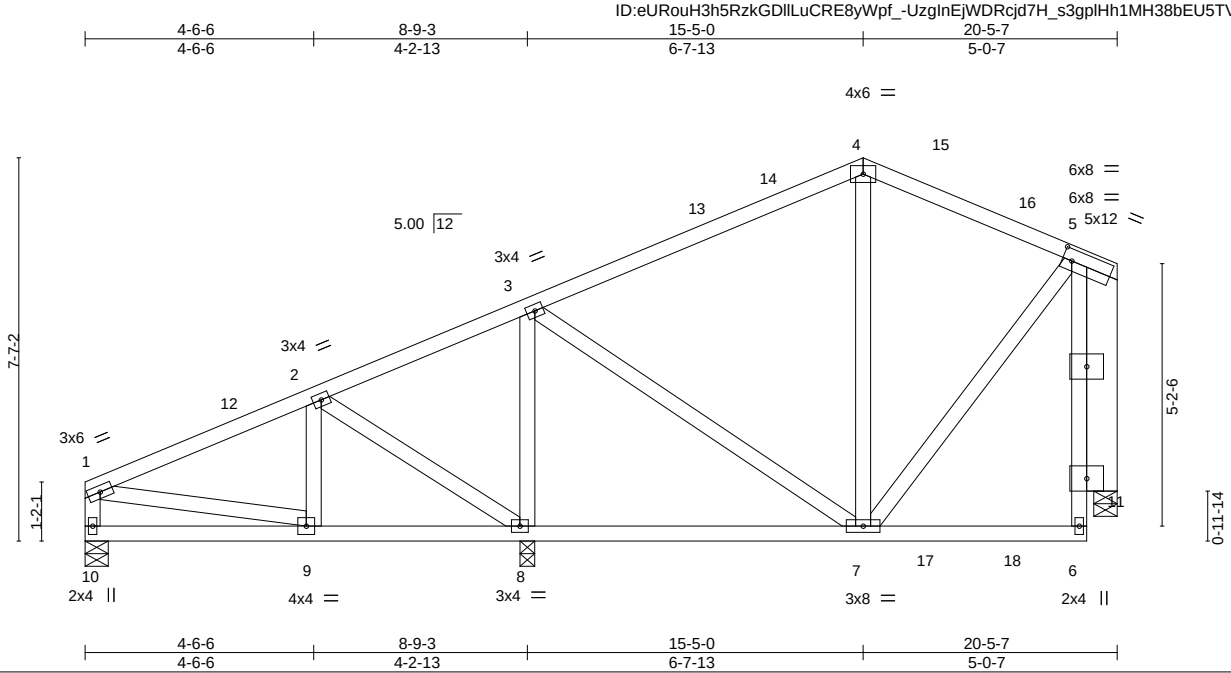

Plate Offsets (X,Y)-- [5:0-2-4,0-2-12]

LOADING (psf)		SPACING-	2-0-0	CSI.		DEFL.	in	(loc)	l/defl	L/d	PLATES	GRIP
TCLL	30.0	Plate Grip DOL	1.15	TC	0.46	Vert(LL)	-0.03	7-8	>999	240	MT20	220/195
(Roof Snow=30.0)		Lumber DOL	1.15	BC	0.18	Vert(CT)	-0.09	7-8	>999	180		
TCDL	14.0	Rep Stress Incr	YES	WB	0.28	Horz(CT)	-0.01	11	n/a	n/a		
BCLL	0.0 *	Code	IBC2015/TPI2014	Matrix-MSH		Wind(LL)	0.05	7-8	>999	360	Weight: 130 lb	FT = 20%
BCDL	10.0											

LUMBER-
TOP CHORD 2x4 DF No.1&Btr G
BOT CHORD 2x4 DF No.1&Btr G
WEBS 2x4 DF Std G
OTHERS 2x8 DF SS

BRACING-
TOP CHORD Structural wood sheathing directly applied or 6-0-0 oc purlins, except end verticals.
BOT CHORD Rigid ceiling directly applied or 6-0-0 oc bracing.

REACTIONS. (lb/size) 10=436/0-5-8, 8=1108/0-3-8, 11=568/0-5-9
Max Horz 10=187(LC 11)
Max Uplift 10=-12(LC 11), 8=-178(LC 11), 11=-89(LC 10)
Max Grav 10=436(LC 1), 8=1108(LC 1), 11=615(LC 22)

FORCES. (lb) - Max. Comp./Max. Ten. - All forces 250 (lb) or less except when shown.
TOP CHORD 1-2=-464/50, 3-4=-367/68, 4-5=-324/79, 1-10=-390/58
BOT CHORD 9-10=-480/110, 8-9=-429/362, 5-11=-583/290
WEBS 2-8=-398/281, 3-8=-768/268, 4-7=-287/78, 1-9=0/258, 5-7=-273/344

NOTES-
1) Wind: ASCE 7-10; Vult=110mph (3-second gust) Vasd=87mph; TCDL=7.2psf; BCDL=4.2psf; h=25ft; Cat. II; Exp C; Enclosed; MWFRS (envelope) and C-C Exterior(2) 0-1-13 to 3-1-13, Interior(1) 3-1-13 to 15-5-0, Exterior(2) 15-5-0 to 18-5-0, Interior(1) 18-5-0 to 19-8-6 zone; cantilever left and right exposed ; porch left and right exposed;C-C for members and forces & MWFRS for reactions shown; Lumber DOL=1.33 plate grip DOL=1.33
2) TCLL: ASCE 7-10; Pf=30.0 psf (flat roof snow); Category II; Exp C; Partially Exp.; Ct=1.00
3) Unbalanced snow loads have been considered for this design.
4) This truss has been designed for a 10.0 psf bottom chord live load nonconcurrent with any other live loads.
5) * This truss has been designed for a live load of 20.0psf on the bottom chord in all areas where a rectangle 3-6-0 tall by 2-0-0 wide will fit between the bottom chord and any other members.
6) A plate rating reduction of 20% has been applied for the green lumber members.
7) Bearing at joint(s) 11 considers parallel to grain value using ANSI/TPI 1 angle to grain formula. Building designer should verify capacity of bearing surface.
8) Provide mechanical connection (by others) of truss to bearing plate capable of withstanding 100 lb uplift at joint(s) 10, 11 except (jt=lb) 8=178.
9) This truss is designed for a creep factor of 3.01, which is used to calculate the Vert(CT) deflection per ANSI/TPI 1.

December 11,2019

WARNING - Verify design parameters and READ NOTES ON THIS AND INCLUDED MITEK REFERENCE PAGE MII-7473 rev. 10/03/2015 BEFORE USE.
Design valid for use only with MiTek® connectors. This design is based only upon parameters shown, and is for an individual building component, not a truss system. Before use, the building designer must verify the applicability of design parameters and properly incorporate this design into the overall building design. Bracing indicated is to prevent buckling of individual truss web and/or chord members only. Additional temporary and permanent bracing is always required for stability and to prevent collapse with possible personal injury and property damage. For general guidance regarding the fabrication, storage, delivery, erection and bracing of trusses and truss systems, see ***ANSI/TPI1 Quality Criteria, DSB-89 and BCSI Building Component Safety Information*** available from Truss Plate Institute, 218 N. Lee Street, Suite 312, Alexandria, VA 22314.

MiTek USA, Inc.
400 Sunrise Avenue, Suite 270
Roseville, CA 95661

Job	Truss	Truss Type	Qty	Ply	ESPINOZA R60548651
J19-319	G02	Common	1	1	Job Reference (optional)

Stockton Truss, STOCKTON, CA 95215 8.330 s Dec 5 2019 MiTek Industries, Inc. Tue Dec 10 11:43:51 2019 Page 1
ID:eURouH3h5RzkGDllLuCRE8yWpf_-QLn2Cwknl2sRsRRN_UiHqinNs4il3zHNxpLFVwyANac

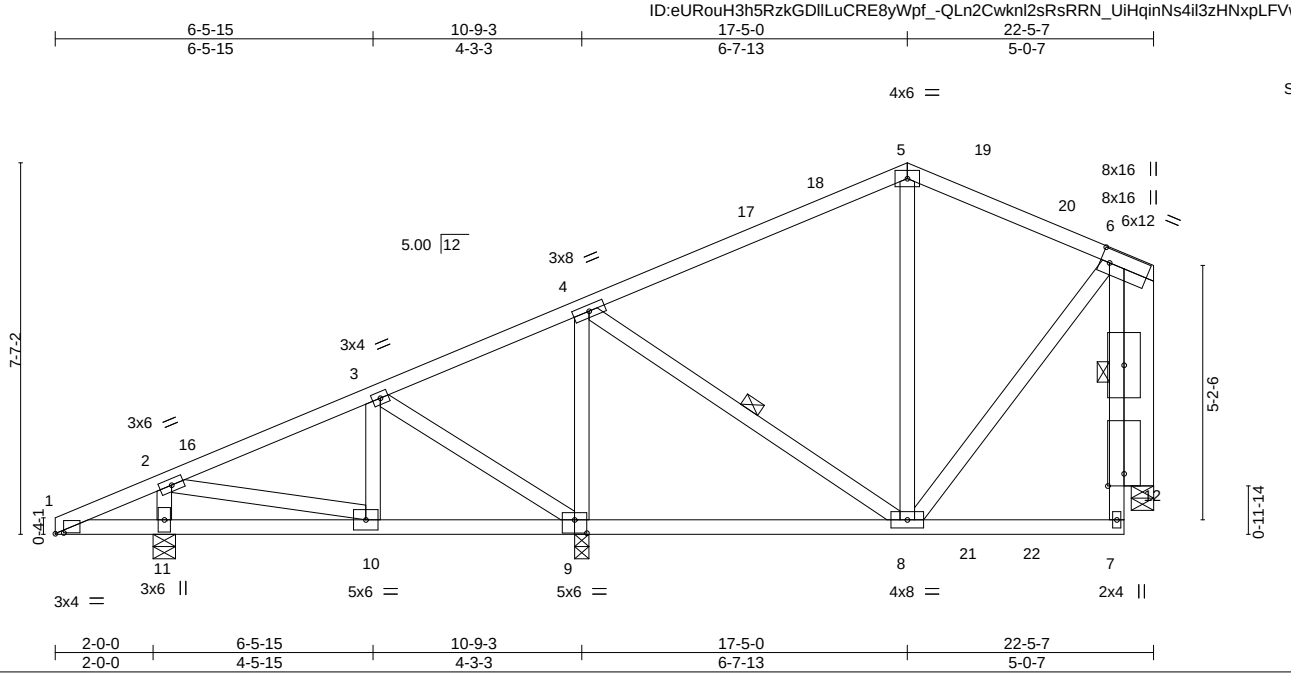

Plate Offsets (X,Y)-- [1:0-2-1,0-0-3], [6:0-2-4,0-3-4], [9:0-3-0,0-3-4], [12:0-3-0,0-4-0]

LOADING (psf)		SPACING-	2-0-0	CSI.		DEFL.	in	(loc)	l/defl	L/d	PLATES	GRIP
TCLL	30.0	Plate Grip DOL	1.15	TC	0.46	Vert(LL)	-0.03	8-9	>999	240	MT20	220/195
(Roof Snow=30.0)		Lumber DOL	1.15	BC	0.36	Vert(CT)	-0.10	8-9	>999	180		
TCDL	14.0	Rep Stress Incr	YES	WB	0.96	Horz(CT)	-0.02	12	n/a	n/a		
BCLL	0.0 *	Code	IBC2015/TPI2014	Matrix-MSH		Wind(LL)	0.05	8-9	>999	360	Weight: 135 lb	FT = 20%
BCDL	10.0											

LUMBER-

TOP CHORD	2x4 DF No.1&Btr G
BOT CHORD	2x4 DF No.1&Btr G
WEBS	2x4 DF Std G
OTHERS	2x8 DF SS

BRACING-

TOP CHORD	Structural wood sheathing directly applied or 5-5-1 oc purlins.
BOT CHORD	Rigid ceiling directly applied or 6-0-0 oc bracing, Except: 4-2-10 oc bracing: 7-8. 4-5-0 oc bracing: 6-12
WEBS	1 Row at midpt 4-8

REACTIONS. (lb/size) 9=1086/0-3-8, 11=688/0-5-8, 12=570/0-5-8
Max Horz 11=1107(LC 40)
Max Uplift 9=-1029(LC 39), 11=-928(LC 37), 12=-8430(LC 40)
Max Grav 9=1575(LC 28), 11=1255(LC 28), 12=8589(LC 57)

FORCES. (lb) - Max. Comp./Max. Ten. - All forces 250 (lb) or less except when shown.

TOP CHORD	1-2=-320/345, 2-3=-1331/1103, 3-4=-955/771, 4-5=-1369/1177, 5-6=-803/648
BOT CHORD	10-11=-1195/784, 9-10=-844/583, 8-9=-1013/807, 7-8=-2440/2288, 7-12=-1190/1154, 6-12=-7425/7219
WEBS	3-10=-436/346, 3-9=-550/578, 4-9=-1442/1310, 4-8=-1266/1248, 5-8=-285/145, 2-10=-1303/1499, 2-11=-1146/915, 6-8=-1157/1043

NOTES-

1) Wind: ASCE 7-10; Vult=110mph (3-second gust) Vasd=87mph; TCDL=7.2psf; BCDL=4.2psf; h=25ft; Cat. II; Exp C; Enclosed; MWFRS (envelope) and C-C Exterior(2) 0-0-0 to 3-0-0, Interior(1) 3-0-0 to 17-5-0, Exterior(2) 17-5-0 to 20-5-0, Interior(1) 20-5-0 to 21-8-6 zone; cantilever left and right exposed ; porch left and right exposed;C-C for members and forces & MWFRS for reactions shown; Lumber DOL=1.33 plate grip DOL=1.33
2) TCLL: ASCE 7-10; Pf=30.0 psf (flat roof snow); Category II; Exp C; Partially Exp.; Ct=1.00
3) Unbalanced snow loads have been considered for this design.
4) This truss has been designed for a 10.0 psf bottom chord live load nonconcurrent with any other live loads.
5) * This truss has been designed for a live load of 20.0psf on the bottom chord in all areas where a rectangle 3-6-0 tall by 2-0-0 wide will fit between the bottom chord and any other members.
6) A plate rating reduction of 20% has been applied for the green lumber members.
7) Bearing at joint(s) 12 considers parallel to grain value using ANSI/TPI 1 angle to grain formula. Building designer should verify capacity of bearing surface.
8) Provide mechanical connection (by others) of truss to bearing plate capable of withstanding 100 lb uplift at joint(s) except (jt=lb) 9=1029, 11=928, 12=8430.
9) This truss has been designed for a total drag load of 3300 lb. Lumber DOL=(1.33) Plate grip DOL=(1.33) Connect truss to resist drag loads along bottom chord from 20-0-0 to 22-5-7 for 1346.6 plf.
10) This truss is designed for a creep factor of 3.01, which is used to calculate the Vert(CT) deflection per ANSI/TPI 1.

December 11,2019

WARNING - Verify design parameters and READ NOTES ON THIS AND INCLUDED MITEK REFERENCE PAGE MII-7473 rev. 10/03/2015 BEFORE USE.
Design valid for use only with MiTek® connectors. This design is based only upon parameters shown, and is for an individual building component, not a truss system. Before use, the building designer must verify the applicability of design parameters and properly incorporate this design into the overall building design. Bracing indicated is to prevent buckling of individual truss web and/or chord members only. Additional temporary and permanent bracing is always required for stability and to prevent collapse with possible personal injury and property damage. For general guidance regarding the fabrication, storage, delivery, erection and bracing of trusses and truss systems, see ***ANSI/TPI1 Quality Criteria, DSB-89 and BCSI Building Component Safety Information*** available from Truss Plate Institute, 218 N. Lee Street, Suite 312, Alexandria, VA 22314.

MiTek USA, Inc.
400 Sunrise Avenue, Suite 270
Roseville, CA 95661

Job	Truss	Truss Type	Qty	Ply	ESPINOZA R60548652
J19-319	G03	Common	2	1	Job Reference (optional)

Stockton Truss, STOCKTON, CA 95215 8.330 s Dec 5 2019 MiTek Industries, Inc. Tue Dec 10 11:43:52 2019 Page 1
ID:eURouH3h5RzkGDllLuCRE8yWpf_-vXLRPGlPWM_IUb0ZXCDWNwJYjU2YoSKX9T4p2MyANab

6-3-1	11-10-1	17-5-0	22-1-11	27-4-1	32-10-0
6-3-1	5-6-15	5-6-15	4-8-11	5-2-6	5-5-15

Scale = 1:54.4

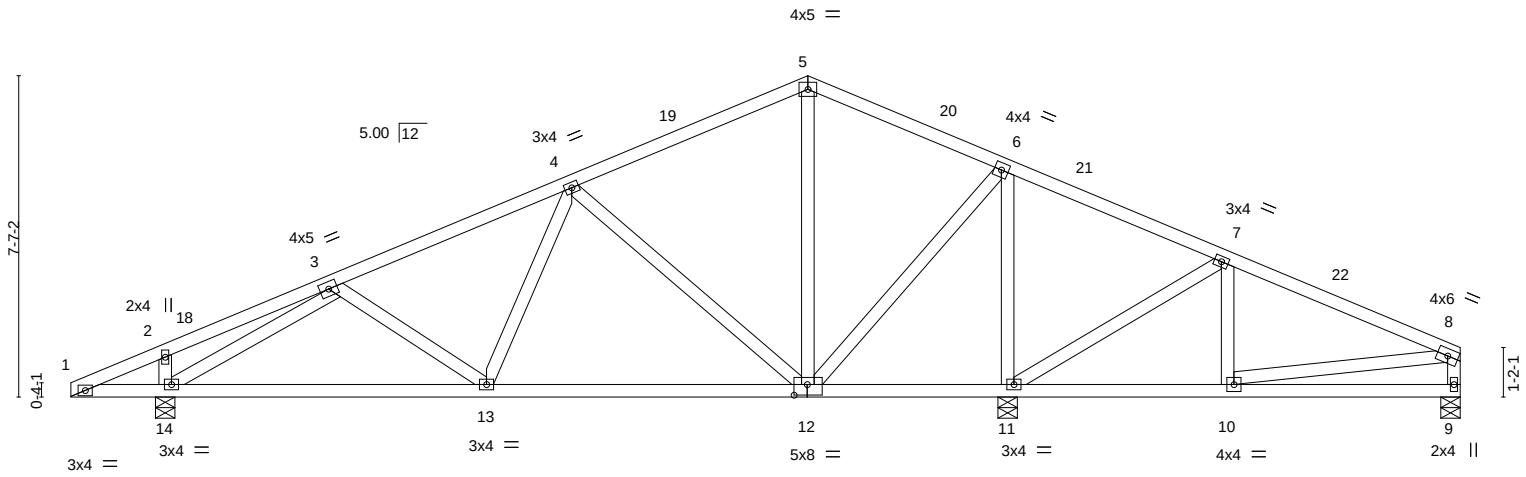

2-0-0	9-9-14	17-5-0	22-1-11	27-4-1	32-10-0
2-0-0	7-9-14	7-7-2	4-8-11	5-2-6	5-5-15

Plate Offsets (X,Y)-- [12:0-3-12,0-3-0]

LOADING (psf)		SPACING-	2-0-0	CSI.		DEFL.	in	(loc)	l/defl	L/d	PLATES	GRIP
TCLL	30.0	Plate Grip DOL	1.15	TC	0.45	Vert(LL)	-0.05	12-13	>999	240	MT20	220/195
(Roof Snow=30.0)		Lumber DOL	1.15	BC	0.32	Vert(CT)	-0.18	12-13	>999	180		
TCDL	14.0	Rep Stress Incr	YES	WB	0.85	Horz(CT)	0.03	9	n/a	n/a		
BCLL	0.0 *	Code	IBC2015/TPI2014	Matrix-MSH		Wind(LL)	0.08	12-13	>999	360	Weight: 170 lb	FT = 20%
BCDL	10.0											

LUMBER-
TOP CHORD 2x4 DF No.1&Btr G
BOT CHORD 2x4 DF No.1&Btr G
WEBS 2x4 DF Std G

BRACING-
TOP CHORD Structural wood sheathing directly applied or 5-5-4 oc purlins, except end verticals.
BOT CHORD Rigid ceiling directly applied or 6-0-0 oc bracing.

REACTIONS. (lb/size) 11=1949/0-5-8, 14=1219/0-5-8, 9=362/0-5-8
Max Horz 14=84(LC 14)
Max Uplift 11=-269(LC 11), 14=-153(LC 10), 9=-41(LC 10)
Max Grav 11=1949(LC 1), 14=1278(LC 20), 9=423(LC 21)

FORCES. (lb) - Max. Comp./Max. Ten. - All forces 250 (lb) or less except when shown.
TOP CHORD 3-4=-1273/520, 4-5=-547/246, 5-6=-439/249, 6-7=-152/482, 7-8=-420/111, 8-9=-372/94
BOT CHORD 13-14=-388/1180, 12-13=-293/1015, 11-12=-366/234, 10-11=-48/312
WEBS 4-13=-241/331, 4-12=-866/332, 6-12=-420/1083, 6-11=-1501/530, 7-11=-675/330, 3-14=-1477/437, 2-14=-307/75

NOTES-
1) Wind: ASCE 7-10; Vult=110mph (3-second gust) Vasd=87mph; TCDL=7.2psf; BCDL=4.2psf; h=25ft; Cat. II; Exp C; Enclosed; MWFRS (envelope) and C-C Exterior(2) 0-0-0 to 3-0-0, Interior(1) 3-0-0 to 17-5-0, Exterior(2) 17-5-0 to 20-5-0, Interior(1) 20-5-0 to 32-8-4 zone; cantilever left and right exposed ; porch left and right exposed;C-C for members and forces & MWFRS for reactions shown; Lumber DOL=1.33 plate grip DOL=1.33
2) TCLL: ASCE 7-10; Pf=30.0 psf (flat roof snow); Category II; Exp C; Partially Exp.; Ct=1.00
3) Unbalanced snow loads have been considered for this design.
4) This truss has been designed for a 10.0 psf bottom chord live load nonconcurrent with any other live loads.
5) * This truss has been designed for a live load of 20.0psf on the bottom chord in all areas where a rectangle 3-6-0 tall by 2-0-0 wide will fit between the bottom chord and any other members.
6) A plate rating reduction of 20% has been applied for the green lumber members.
7) Provide mechanical connection (by others) of truss to bearing plate capable of withstanding 100 lb uplift at joint(s) 9 except (jt=lb) 11=269, 14=153.
8) This truss is designed for a creep factor of 3.01, which is used to calculate the Vert(CT) deflection per ANSI/TPI 1.

December 11,2019

WARNING - Verify design parameters and READ NOTES ON THIS AND INCLUDED MITEK REFERENCE PAGE MII-7473 rev. 10/03/2015 BEFORE USE.
Design valid for use only with MiTek® connectors. This design is based only upon parameters shown, and is for an individual building component, not a truss system. Before use, the building designer must verify the applicability of design parameters and properly incorporate this design into the overall building design. Bracing indicated is to prevent buckling of individual truss web and/or chord members only. Additional temporary and permanent bracing is always required for stability and to prevent collapse with possible personal injury and property damage. For general guidance regarding the fabrication, storage, delivery, erection and bracing of trusses and truss systems, see ***ANSI/TPI1 Quality Criteria, DSB-89 and BCSI Building Component Safety Information*** available from Truss Plate Institute, 218 N. Lee Street, Suite 312, Alexandria, VA 22314.

MiTek USA, Inc.
400 Sunrise Avenue, Suite 270
Roseville, CA 95661

Job	Truss	Truss Type	Qty	Ply	ESPINOZA R60548653
J19-319	G04	Common	1	1	Job Reference (optional)

Stockton Truss, STOCKTON, CA 95215 8.330 s Dec 5 2019 MiTek Industries, Inc. Tue Dec 10 11:43:53 2019 Page 1
ID:eURouH3h5RzkGDllLuCRE8yWpf_-Nkvpdcm1Hg796kbl5vllw7sjpuQxX_3gO7qMaoyANaa

5-9-9	11-4-9	16-11-8	22-6-7	28-1-7	33-10-8
5-9-9	5-6-15	5-6-15	5-6-15	5-6-15	5-9-1

Scale = 1:54.3

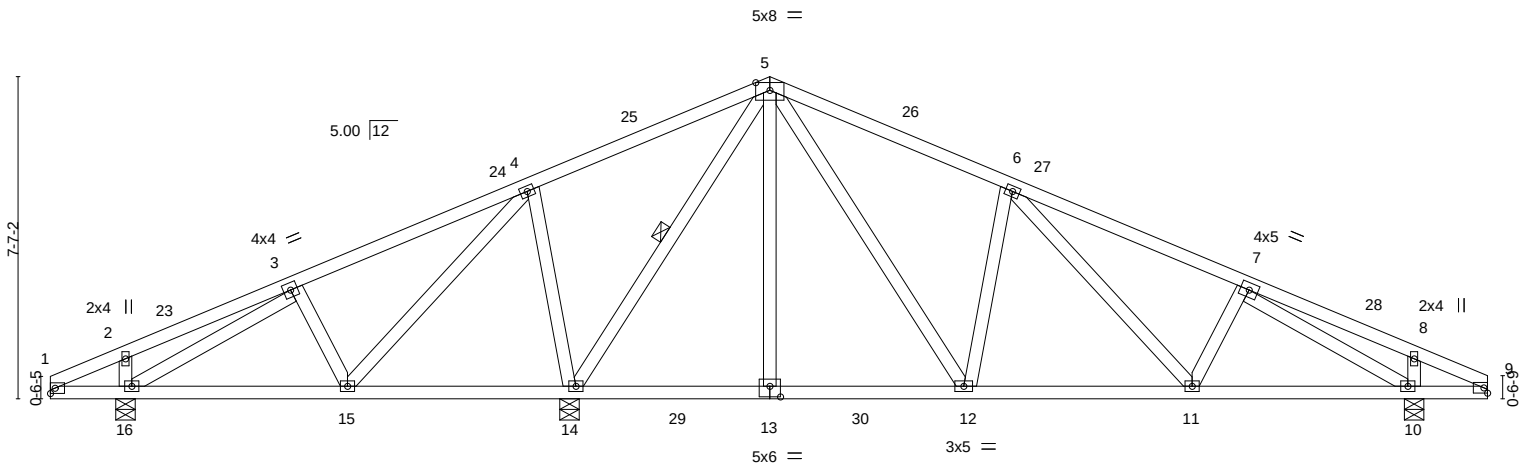

1-6-8	7-0-1	12-2-13	16-11-8	21-8-3	26-10-15	32-4-8	33-10-8
1-6-8	5-5-9	5-2-13	4-8-11	4-8-11	5-2-13	5-5-9	1-6-0

Plate Offsets (X,Y)-- [13:0-3-0,0-3-0]

LOADING (psf)		SPACING-	2-0-0	CSI.		DEFL.	in	(loc)	l/defl	L/d	PLATES	GRIP
TCLL	30.0	Plate Grip DOL	1.15	TC	0.50	Vert(LL)	-0.05	11-12	>999	240	MT20	220/195
(Roof Snow=30.0)		Lumber DOL	1.15	BC	0.25	Vert(CT)	-0.12	11-12	>999	180		
TCDL	14.0	Rep Stress Incr	YES	WB	0.56	Horz(CT)	-0.03	14	n/a	n/a		
BCLL	0.0 *	Code	IBC2015/TPI2014	Matrix-MSH		Wind(LL)	0.04	11-12	>999	360	Weight: 182 lb	FT = 20%
BCDL	10.0											

LUMBER-
TOP CHORD 2x4 DF No.1&Btr G
BOT CHORD 2x4 DF No.1&Btr G
WEBS 2x4 DF Std G

BRACING-
TOP CHORD Structural wood sheathing directly applied or 5-2-11 oc purlins.
BOT CHORD Rigid ceiling directly applied or 10-0-0 oc bracing, Except:
6-0-0 oc bracing: 1-16,14-15.
WEBS 1 Row at midpt 5-14

REACTIONS. (lb/size) 14=1971/0-5-8, 16=541/0-5-8, 10=1146/0-5-8
Max Horz 10=68(LC 14)
Max Uplift 14=-265(LC 11), 16=-66(LC 10), 10=-147(LC 11)
Max Grav 14=1971(LC 1), 16=596(LC 20), 10=1226(LC 21)

FORCES. (lb) - Max. Comp./Max. Ten. - All forces 250 (lb) or less except when shown.
TOP CHORD 4-5=-87/552, 5-6=-1136/469, 6-7=-1377/564
BOT CHORD 15-16=-24/277, 14-15=-308/207, 13-14=-17/360, 12-13=-17/360, 11-12=-278/1047, 10-11=-397/1235
WEBS 5-12=-412/1015, 6-12=-759/213, 6-11=-187/282, 5-14=-1374/494, 4-14=-877/259, 4-15=-286/528, 3-15=-337/81, 3-16=-374/51, 2-16=-283/86, 7-10=-1448/465, 8-10=-309/97

NOTES-
1) Wind: ASCE 7-10; Vult=110mph (3-second gust) Vasd=87mph; TCDL=7.2psf; BCDL=4.2psf; h=25ft; Cat. II; Exp C; Enclosed; MWFRS (envelope) and C-C Exterior(2) 0-0-0 to 3-0-0, Interior(1) 3-0-0 to 16-11-8, Exterior(2) 16-11-8 to 19-11-8, Interior(1) 19-11-8 to 33-10-8 zone; cantilever left and right exposed ; porch left and right exposed;C-C for members and forces & MWFRS for reactions shown; Lumber DOL=1.33 plate grip DOL=1.33
2) TCLL: ASCE 7-10; Pf=30.0 psf (flat roof snow); Category II; Exp C; Partially Exp.; Ct=1.00
3) Unbalanced snow loads have been considered for this design.
4) All plates are 3x4 MT20 unless otherwise indicated.
5) This truss has been designed for a 10.0 psf bottom chord live load nonconcurrent with any other live loads.
6) * This truss has been designed for a live load of 20.0psf on the bottom chord in all areas where a rectangle 3-6-0 tall by 2-0-0 wide will fit between the bottom chord and any other members, with BCDL = 10.0psf.
7) A plate rating reduction of 20% has been applied for the green lumber members.
8) Provide mechanical connection (by others) of truss to bearing plate capable of withstanding 100 lb uplift at joint(s) 16 except (jt=lb) 14=265, 10=147.
9) This truss is designed for a creep factor of 3.01, which is used to calculate the Vert(CT) deflection per ANSI/TPI 1.

December 11,2019

WARNING - Verify design parameters and READ NOTES ON THIS AND INCLUDED MITEK REFERENCE PAGE MII-7473 rev. 10/03/2015 BEFORE USE.
Design valid for use only with MiTek® connectors. This design is based only upon parameters shown, and is for an individual building component, not a truss system. Before use, the building designer must verify the applicability of design parameters and properly incorporate this design into the overall building design. Bracing indicated is to prevent buckling of individual truss web and/or chord members only. Additional temporary and permanent bracing is always required for stability and to prevent collapse with possible personal injury and property damage. For general guidance regarding the fabrication, storage, delivery, erection and bracing of trusses and truss systems, see ***ANSI/TPI1 Quality Criteria, DSB-89 and BCSI Building Component Safety Information*** available from Truss Plate Institute, 218 N. Lee Street, Suite 312, Alexandria, VA 22314.

MiTek USA, Inc.
400 Sunrise Avenue, Suite 270
Roseville, CA 95661

Job	Truss	Truss Type	Qty	Ply	ESPINOZA R60548654
J19-319	G05	COMMON	1	1	Job Reference (optional)

Stockton Truss, STOCKTON, CA 95215 8.330 s Dec 5 2019 MiTek Industries, Inc. Tue Dec 10 11:43:55 2019 Page 1
ID:eURouH3h5RzkGDllLuCRE8yWpf_-J61Z2InHpHNtL2k8DKnD?Yx30h1E?nxzsRJTehyANaY

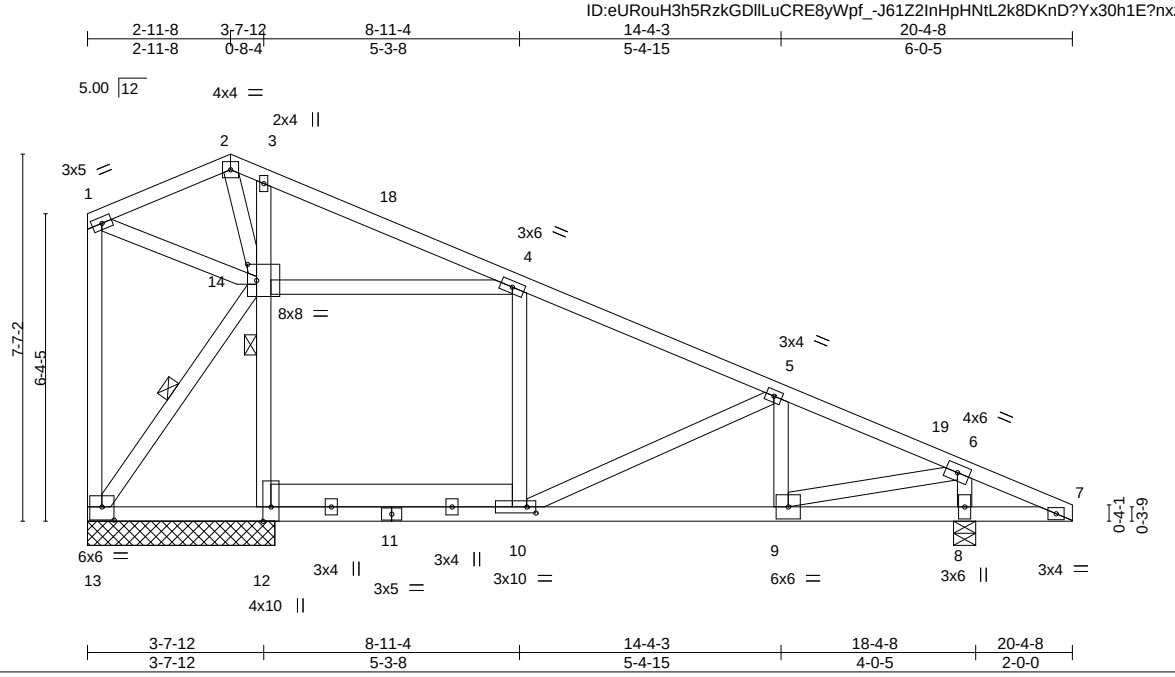

Plate Offsets (X,Y)-- [10:0-2-4,0-1-8], [13:0-3-0,0-3-4], [14:0-2-4,0-4-0]

LOADING (psf)		SPACING-	2-0-0	CSI.		DEFL.	in	(loc)	l/defl	L/d	PLATES	GRIP
TCLL	30.0	Plate Grip DOL	1.15	TC	0.45	Vert(LL)	-0.07	9-10	>999	240	MT20	220/195
(Roof Snow=30.0)		Lumber DOL	1.15	BC	0.45	Vert(CT)	-0.21	9-10	>834	180		
TCDL	14.0	Rep Stress Incr	YES	WB	0.98	Horz(CT)	0.03	8	n/a	n/a		
BCLL	0.0 *	Code IBC2015/TPI2014		Matrix-MSH		Wind(LL)	0.08	9-10	>999	360	Weight: 133 lb	FT = 20%
BCDL	10.0											

LUMBER-
TOP CHORD 2x4 DF No.1&Btr G
BOT CHORD 2x4 DF No.1&Btr G *Except*
10-12: 2x6 DF SS G
WEBS 2x4 DF Std G

BRACING-
TOP CHORD Structural wood sheathing directly applied or 4-10-2 oc purlins, except end verticals.
BOT CHORD Rigid ceiling directly applied or 4-6-15 oc bracing.
WEBS 1 Row at midpt 3-12, 13-14

REACTIONS. (lb/size) 12=637/3-10-8, 8=1104/0-5-8, 13=443/3-10-8
Max Horz 13=-186(LC 48)
Max Uplift 12=-978(LC 40), 8=-1064(LC 40), 13=-1227(LC 47)
Max Grav 12=1381(LC 27), 8=1684(LC 27), 13=1331(LC 58)

FORCES. (lb) - Max. Comp./Max. Ten. - All forces 250 (lb) or less except when shown.
TOP CHORD 1-2=-754/1150, 2-3=-788/1206, 3-4=-1513/1747, 4-5=-1637/1488, 5-6=-1896/1667, 6-7=-317/341, 1-13=-517/772
BOT CHORD 12-13=-2048/2149, 10-12=-1999/2103, 9-10=-1754/1909
WEBS 12-14=-1162/1056, 3-14=-576/215, 4-14=-2012/1429, 4-10=-458/390, 5-10=-668/673, 5-9=-443/396, 6-9=-1847/2039, 6-8=-1562/1312, 13-14=-2053/1846, 1-14=-1161/785, 2-14=-760/464

NOTES-
1) Wind: ASCE 7-10; Vult=110mph (3-second gust) Vasd=87mph; TCDL=7.2psf; BCDL=4.2psf; h=25ft; Cat. II; Exp C; Enclosed; MWFRS (envelope) and C-C Exterior(2) 0-1-13 to 5-11-8, Interior(1) 5-11-8 to 20-4-8 zone; cantilever left and right exposed ; porch left and right exposed;C-C for members and forces & MWFRS for reactions shown; Lumber DOL=1.33 plate grip DOL=1.33
2) TCLL: ASCE 7-10; Pf=30.0 psf (flat roof snow); Category II; Exp C; Partially Exp.; Ct=1.00
3) Unbalanced snow loads have been considered for this design.
4) This truss has been designed for a 10.0 psf bottom chord live load nonconcurrent with any other live loads.
5) * This truss has been designed for a live load of 20.0psf on the bottom chord in all areas where a rectangle 3-6-0 tall by 2-0-0 wide will fit between the bottom chord and any other members, with BCDL = 10.0psf.
6) A plate rating reduction of 20% has been applied for the green lumber members.
7) Provide mechanical connection (by others) of truss to bearing plate capable of withstanding 100 lb uplift at joint(s) except (jt=lb) 12=978, 8=1064, 13=1227.
8) This truss has been designed for a total drag load of 2500 lb. Lumber DOL=(1.33) Plate grip DOL=(1.33) Connect truss to resist drag loads along bottom chord from 0-0-0 to 3-6-0 for 714.3 plf.
9) This truss is designed for a creep factor of 3.01, which is used to calculate the Vert(CT) deflection per ANSI/TPI 1.

December 11,2019

WARNING - Verify design parameters and READ NOTES ON THIS AND INCLUDED MITEK REFERENCE PAGE MII-7473 rev. 10/03/2015 BEFORE USE.
Design valid for use only with MiTek® connectors. This design is based only upon parameters shown, and is for an individual building component, not a truss system. Before use, the building designer must verify the applicability of design parameters and properly incorporate this design into the overall building design. Bracing indicated is to prevent buckling of individual truss web and/or chord members only. Additional temporary and permanent bracing is always required for stability and to prevent collapse with possible personal injury and property damage. For general guidance regarding the fabrication, storage, delivery, erection and bracing of trusses and truss systems, see ***ANSI/TPI1 Quality Criteria, DSB-89 and BCSI Building Component Safety Information*** available from Truss Plate Institute, 218 N. Lee Street, Suite 312, Alexandria, VA 22314.

MiTek USA, Inc.
400 Sunrise Avenue, Suite 270
Roseville, CA 95661

Job	Truss	Truss Type	Qty	Ply	ESPINOZA R60548655
J19-319	G06	COMMON	5	1	Job Reference (optional)

Stockton Truss, STOCKTON, CA 95215 8.330 s Dec 5 2019 MiTek Industries, Inc. Tue Dec 10 11:43:56 2019 Page 1
ID:eURouH3h5RzkGDllLuCRE8yWpf_-nJbxFeovabVkzCJKm1ISXmUEU5PDkE974520B7yANaX

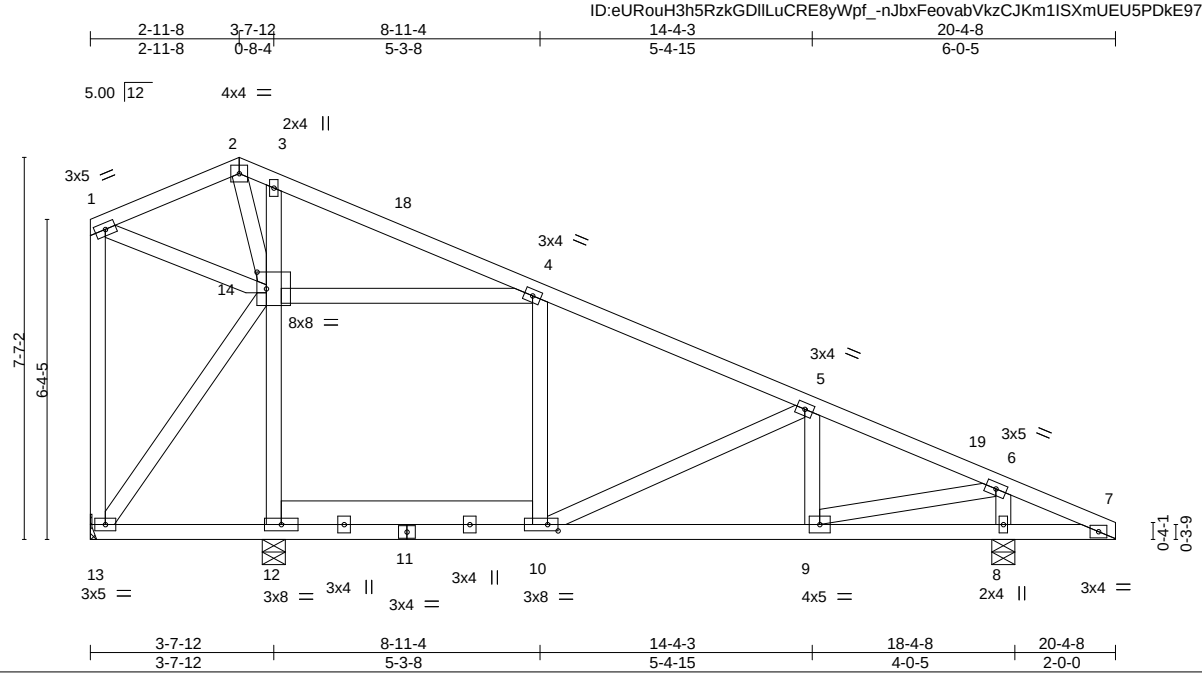

Plate Offsets (X,Y)-- [10:0-2-8,0-1-8], [14:0-2-4,0-4-0]

LOADING (psf)		SPACING-	2-0-0	CSI.		DEFL.	in	(loc)	l/defl	L/d	PLATES	GRIP
TCLL	30.0	Plate Grip DOL	1.15	TC	0.47	Vert(LL)	-0.07	9-10	>999	240	MT20	220/195
(Roof Snow=30.0)		Lumber DOL	1.15	BC	0.34	Vert(CT)	-0.23	9-10	>765	180		
TCDL	14.0	Rep Stress Incr	YES	WB	0.92	Horz(CT)	0.02	8	n/a	n/a		
BCLL	0.0 *	Code IBC2015/TPI2014		Matrix-MSH		Wind(LL)	0.08	9-10	>999	360	Weight: 133 lb	FT = 20%
BCDL	10.0											

LUMBER-
TOP CHORD 2x4 DF No.1&Btr G
BOT CHORD 2x4 DF No.1&Btr G *Except*
10-12: 2x6 DF SS G
WEBS 2x4 DF Std G

BRACING-
TOP CHORD Structural wood sheathing directly applied or 6-0-0 oc purlins, except end verticals.
BOT CHORD Rigid ceiling directly applied or 6-0-0 oc bracing.

REACTIONS. (lb/size) 12=709/0-5-8, 8=1131/0-5-8, 13=465/Mechanical
Max Horz 13=-169(LC 15)
Max Uplift 8=-101(LC 11), 13=-81(LC 10)
Max Grav 12=733(LC 2), 8=1131(LC 1), 13=465(LC 1)

FORCES. (lb) - Max. Comp./Max. Ten. - All forces 250 (lb) or less except when shown.
TOP CHORD 1-2=-462/1155, 2-3=-468/1178, 3-4=-559/1336, 4-5=-876/303, 5-6=-1143/442, 1-13=-286/718
BOT CHORD 12-13=-161/738, 10-12=-154/725, 9-10=-349/1003
WEBS 12-14=-479/110, 3-14=-587/204, 4-14=-1867/832, 4-10=-211/330, 5-10=-310/210, 6-9=-454/1181, 6-8=-1036/388, 13-14=-1342/617, 1-14=-1100/469, 2-14=-792/331

NOTES-
1) Wind: ASCE 7-10; Vult=110mph (3-second gust) Vasd=87mph; TCDL=7.2psf; BCDL=4.2psf; h=25ft; Cat. II; Exp C; Enclosed; MWFRS (envelope) and C-C Exterior(2) 0-1-13 to 5-11-8, Interior(1) 5-11-8 to 20-4-8 zone; cantilever left and right exposed ; porch left and right exposed;C-C for members and forces & MWFRS for reactions shown; Lumber DOL=1.33 plate grip DOL=1.33
2) TCLL: ASCE 7-10; Pf=30.0 psf (flat roof snow); Category II; Exp C; Partially Exp.; Ct=1.00
3) Unbalanced snow loads have been considered for this design.
4) 120.0lb AC unit load placed on the bottom chord, 6-3-8 from left end, supported at two points, 5-0-0 apart.
5) This truss has been designed for a 10.0 psf bottom chord live load nonconcurrent with any other live loads.
6) * This truss has been designed for a live load of 20.0psf on the bottom chord in all areas where a rectangle 3-6-0 tall by 2-0-0 wide will fit between the bottom chord and any other members, with BCDL = 10.0psf.
7) A plate rating reduction of 20% has been applied for the green lumber members.
8) Refer to girder(s) for truss to truss connections.
9) Provide mechanical connection (by others) of truss to bearing plate capable of withstanding 100 lb uplift at joint(s) 13 except (jt=lb) 8=101.
10) This truss is designed for a creep factor of 3.01, which is used to calculate the Vert(CT) deflection per ANSI/TPI 1.

REGISTERED PROFESSIONAL ENGINEER EDUARD TEODOSESCU C 75435 EXP. 03/31/2020 STATE OF CALIFORNIA

December 11,2019

WARNING - Verify design parameters and READ NOTES ON THIS AND INCLUDED MITEK REFERENCE PAGE MII-7473 rev. 10/03/2015 BEFORE USE.
Design valid for use only with MiTek® connectors. This design is based only upon parameters shown, and is for an individual building component, not a truss system. Before use, the building designer must verify the applicability of design parameters and properly incorporate this design into the overall building design. Bracing indicated is to prevent buckling of individual truss web and/or chord members only. Additional temporary and permanent bracing is always required for stability and to prevent collapse with possible personal injury and property damage. For general guidance regarding the fabrication, storage, delivery, erection and bracing of trusses and truss systems, see ***ANSI/TPI1 Quality Criteria, DSB-89 and BCSI Building Component Safety Information*** available from Truss Plate Institute, 218 N. Lee Street, Suite 312, Alexandria, VA 22314.

MiTek USA, Inc.
400 Sunrise Avenue, Suite 270
Roseville, CA 95661

Job	Truss	Truss Type	Qty	Ply	ESPINOZA R60548656
J19-319	G07	California	1	1	Job Reference (optional)

Stockton Truss, STOCKTON, CA 95215 8.330 s Dec 5 2019 MiTek Industries, Inc. Tue Dec 10 11:43:58 2019 Page 1
ID:eURouH3h5RzkGDllLuCRE8yWpf_-jhiigJqA6ClSCWTjuSKwdBZZlv7DCAFPYPX7F0yANaV

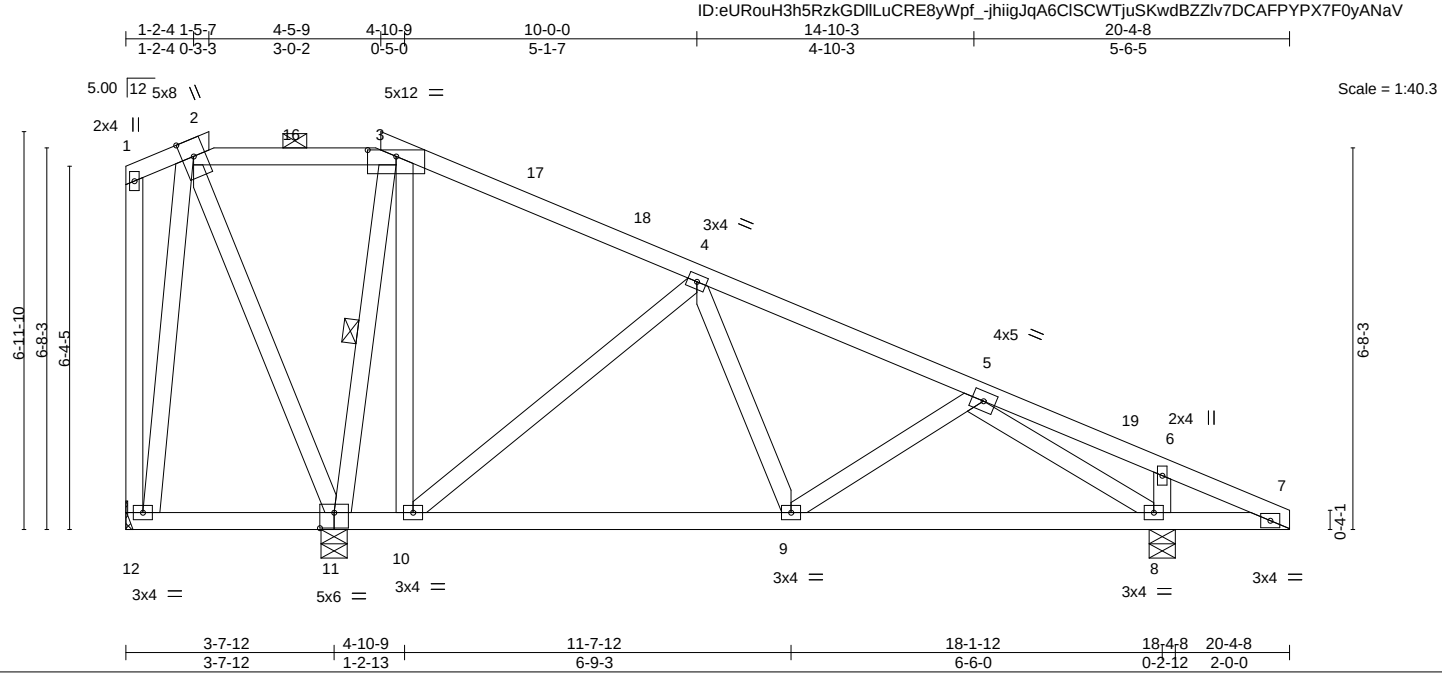

Plate Offsets (X,Y)-- [3:0-6-0,0-1-6], [11:0-3-0,0-3-4]

LOADING (psf)		SPACING-	2-0-0	CSI.		DEFL.	in	(loc)	l/defl	L/d	PLATES	GRIP
TCLL	30.0	Plate Grip DOL	1.15	TC	0.48	Vert(LL)	-0.04	9-10	>999	240	MT20	220/195
(Roof Snow=30.0)		Lumber DOL	1.15	BC	0.24	Vert(CT)	-0.13	9-10	>999	180		
TCDL	14.0	Rep Stress Incr	YES	WB	0.82	Horz(CT)	0.02	8	n/a	n/a		
BCLL	0.0 *	Code	IBC2015/TPI2014	Matrix-MSH		Wind(LL)	0.06	9-10	>999	360	Weight: 128 lb	FT = 20%
BCDL	10.0											

LUMBER-
TOP CHORD 2x4 DF No.1&Btr G
BOT CHORD 2x4 DF No.1&Btr G
WEBS 2x4 DF Std G

BRACING-
TOP CHORD Structural wood sheathing directly applied or 5-10-0 oc purlins, except end verticals, and 2-0-0 oc purlins (10-0-0 max.): 2-3.
BOT CHORD Rigid ceiling directly applied or 6-0-0 oc bracing.
WEBS 1 Row at midpt 3-11

REACTIONS. (lb/size) 12=62/Mechanical, 11=1733/0-5-8, 8=993/0-5-8
Max Horz 12=-163(LC 15)
Max Uplift 12=-218(LC 44), 11=-244(LC 10), 8=-112(LC 11)
Max Grav 12=197(LC 34), 11=2170(LC 32), 8=1437(LC 32)

FORCES. (lb) - Max. Comp./Max. Ten. - All forces 250 (lb) or less except when shown.
TOP CHORD 4-5=-1102/377, 5-6=-2/303, 6-7=-37/286
BOT CHORD 9-10=-148/822, 8-9=-236/1053
WEBS 2-11=-578/85, 3-11=-1498/508, 3-10=-406/679, 4-10=-1035/370, 4-9=-271/284, 2-12=-161/284, 5-8=-1537/334, 6-8=-397/69

NOTES-
1) Wind: ASCE 7-10; Vult=110mph (3-second gust) Vasd=87mph; TCDL=7.2psf; BCDL=4.2psf; h=25ft; Cat. II; Exp C; Enclosed; MWFRS (envelope) and C-C Exterior(2) 0-1-12 to 8-9-15, Interior(1) 8-9-15 to 20-4-8 zone; cantilever left and right exposed ; porch left and right exposed;C-C for members and forces & MWFRS for reactions shown; Lumber DOL=1.33 plate grip DOL=1.33
2) TCLL: ASCE 7-10; Pf=30.0 psf (flat roof snow); Category II; Exp C; Partially Exp.; Ct=1.00
3) Unbalanced snow loads have been considered for this design.
4) Provide adequate drainage to prevent water ponding.
5) This truss has been designed for a 10.0 psf bottom chord live load nonconcurrent with any other live loads.
6) * This truss has been designed for a live load of 20.0psf on the bottom chord in all areas where a rectangle 3-6-0 tall by 2-0-0 wide will fit between the bottom chord and any other members.
7) A plate rating reduction of 20% has been applied for the green lumber members.
8) Refer to girder(s) for truss to truss connections.
9) Provide mechanical connection (by others) of truss to bearing plate capable of withstanding 100 lb uplift at joint(s) except (jt=lb) 12=218, 11=244, 8=112.
10) Graphical purlin representation does not depict the size or the orientation of the purlin along the top and/or bottom chord.
11) Hanger(s) or other connection device(s) shall be provided sufficient to support concentrated load(s) 345 lb down and 172 lb up at 1-4-0, and 128 lb down and 67 lb up at 2-11-8, and 434 lb down and 170 lb up at 4-7-1 on top chord. The design/selection of such connection device(s) is the responsibility of others.
12) This truss is designed for a creep factor of 3.01, which is used to calculate the Vert(CT) deflection per ANSI/TPI 1.

LOAD CASE(S) Standard
1) Dead + Snow (balanced): Lumber Increase=1.15, Plate Increase=1.15
Uniform Loads (plf)
Vert: 1-2=-88, 2-3=-88, 3-7=-88, 12-13=-20

REGISTERED PROFESSIONAL ENGINEER
EDUARD TEODOSESCU
C 75435
EXP. 03/31/2020
STATE OF CALIFORNIA

December 11,2019

Continued on page 2

WARNING - Verify design parameters and READ NOTES ON THIS AND INCLUDED MITEK REFERENCE PAGE MII-7473 rev. 10/03/2015 BEFORE USE.
Design valid for use only with MiTek® connectors. This design is based only upon parameters shown, and is for an individual building component, not a truss system. Before use, the building designer must verify the applicability of design parameters and properly incorporate this design into the overall building design. Bracing indicated is to prevent buckling of individual truss web and/or chord members only. Additional temporary and permanent bracing is always required for stability and to prevent collapse with possible personal injury and property damage. For general guidance regarding the fabrication, storage, delivery, erection and bracing of trusses and truss systems, see ***ANSI/TPI1 Quality Criteria, DSB-89 and BCSI Building Component Safety Information*** available from Truss Plate Institute, 218 N. Lee Street, Suite 312, Alexandria, VA 22314.

MiTek USA, Inc.
400 Sunrise Avenue, Suite 270
Roseville, CA 95661

LOAD CASE(S) Standard

Concentrated Loads (lb)

Vert: 2=-228 3=-315 16=-61

WARNING - Verify design parameters and READ NOTES ON THIS AND INCLUDED MITEK REFERENCE PAGE MII-7473 rev. 10/03/2015 BEFORE USE.

Design valid for use only with MiTek® connectors. This design is based only upon parameters shown, and is for an individual building component, not a truss system. Before use, the building designer must verify the applicability of design parameters and properly incorporate this design into the overall building design. Bracing indicated is to prevent buckling of individual truss web and/or chord members only. Additional temporary and permanent bracing is always required for stability and to prevent collapse with possible personal injury and property damage. For general guidance regarding the fabrication, storage, delivery, erection and bracing of trusses and truss systems, see ***ANSI/TPI1 Quality Criteria, DSB-89 and BCSI Building Component Safety Information*** available from Truss Plate Institute, 218 N. Lee Street, Suite 312, Alexandria, VA 22314.

MiTek USA, Inc.
400 Sunrise Avenue, Suite 270
Roseville, CA 95661

Job	Truss	Truss Type	Qty	Ply	ESPINOZA R60548657
J19-319	G08	Roof Special	1	1	Job Reference (optional)

Stockton Truss, STOCKTON, CA 95215 8.330 s Dec 5 2019 MiTek Industries, Inc. Tue Dec 10 11:43:59 2019 Page 1
ID:eURouH3h5RzkGDllLuCRE8yWpf_-CuG4tfqotWtlqf2vRAr99O6cbJToxbTZn3HgnSyANaU

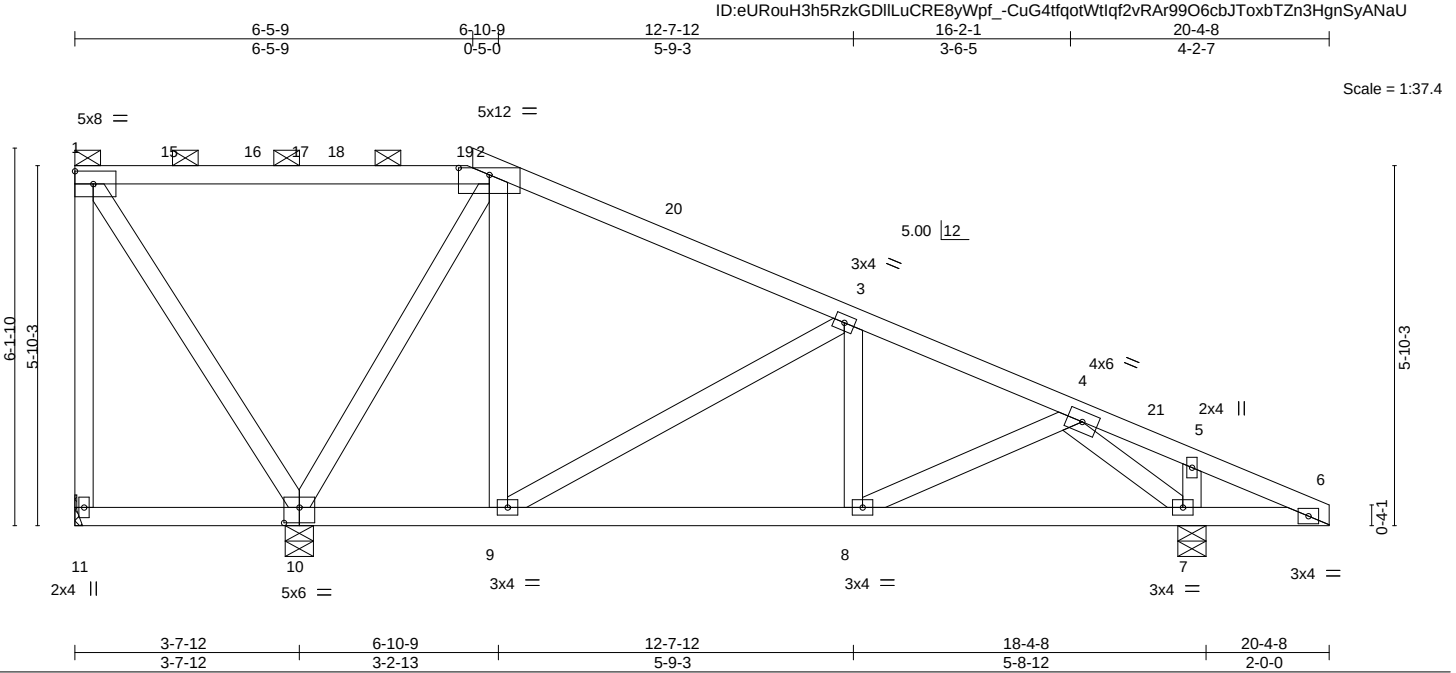

Plate Offsets (X,Y)-- [2:0-6-0,0-1-6], [10:0-3-0,0-3-0]

LOADING (psf)		SPACING-	2-0-0	CSI.		DEFL.	in	(loc)	l/defl	L/d	PLATES	GRIP
TCLL	30.0	Plate Grip DOL	1.15	TC	0.99	Vert(LL)	-0.03	8-9	>999	240	MT20	220/195
(Roof Snow=30.0)		Lumber DOL	1.15	BC	0.22	Vert(CT)	-0.09	8-9	>999	180		
TCDL	14.0	Rep Stress Incr	YES	WB	0.95	Horz(CT)	0.02	7	n/a	n/a		
BCLL	0.0 *	Code	IBC2015/TPI2014	Matrix-MSH		Wind(LL)	0.04	8-9	>999	360	Weight: 112 lb	FT = 20%
BCDL	10.0											

LUMBER-
TOP CHORD 2x4 DF No.1&Btr G
BOT CHORD 2x4 DF No.1&Btr G
WEBS 2x4 DF Std G *Except*
1-11: 2x4 DF No.1&Btr G

BRACING-
TOP CHORD Structural wood sheathing directly applied or 5-4-8 oc purlins, except end verticals, and 2-0-0 oc purlins (2-2-0 max.): 1-2.
BOT CHORD Rigid ceiling directly applied or 10-0-0 oc bracing, Except: 6-0-0 oc bracing: 6-7.

REACTIONS. (lb/size) 11=97/Mechanical, 10=1331/0-5-8, 7=1019/0-5-8
Max Horz 11=-144(LC 15)
Max Uplift 11=-182(LC 37), 10=-196(LC 10), 7=-118(LC 11)
Max Grav 11=214(LC 27), 10=1655(LC 29), 7=1454(LC 29)

FORCES. (lb) - Max. Comp./Max. Ten. - All forces 250 (lb) or less except when shown.
TOP CHORD 2-3=-604/174, 3-4=-1268/410, 4-5=-37/298, 5-6=-72/330
BOT CHORD 9-10=-7/410, 8-9=-303/1132, 7-8=-195/814
WEBS 1-10=-513/99, 2-10=-1321/467, 2-9=-329/489, 3-9=-814/329, 4-8=-120/353, 4-7=-1438/351, 5-7=-343/70

NOTES-
1) Wind: ASCE 7-10; Vult=110mph (3-second gust) Vasd=87mph; TCDL=7.2psf; BCDL=4.2psf; h=25ft; Cat. II; Exp C; Enclosed; MWFRS (envelope) and C-C Exterior(2) 0-1-12 to 3-1-12, Interior(1) 3-1-12 to 6-8-12, Exterior(2) 6-8-12 to 9-8-12, Interior(1) 9-8-12 to 20-4-8 zone; cantilever left and right exposed ; porch left and right exposed;C-C for members and forces & MWFRS for reactions shown; Lumber DOL=1.33 plate grip DOL=1.33
2) TCLL: ASCE 7-10; Pf=30.0 psf (flat roof snow); Category II; Exp C; Partially Exp.; Ct=1.00
3) Unbalanced snow loads have been considered for this design.
4) Provide adequate drainage to prevent water ponding.
5) This truss has been designed for a 10.0 psf bottom chord live load nonconcurrent with any other live loads.
6) * This truss has been designed for a live load of 20.0psf on the bottom chord in all areas where a rectangle 3-6-0 tall by 2-0-0 wide will fit between the bottom chord and any other members.
7) A plate rating reduction of 20% has been applied for the green lumber members.
8) Refer to girder(s) for truss to truss connections.
9) Provide mechanical connection (by others) of truss to bearing plate capable of withstanding 100 lb uplift at joint(s) except (jt=lb) 11=182, 10=196, 7=118.
10) Graphical purlin representation does not depict the size or the orientation of the purlin along the top and/or bottom chord.
11) Hanger(s) or other connection device(s) shall be provided sufficient to support concentrated load(s) 150 lb down and 81 lb up at 1-7-4, 160 lb down and 84 lb up at 2-11-8, and 150 lb down and 81 lb up at 4-3-12, and 150 lb down and 99 lb up at 6-4-14 on top chord. The design/selection of such connection device(s) is the responsibility of others.
12) This truss is designed for a creep factor of 3.01, which is used to calculate the Vert(CT) deflection per ANSI/TPI 1.

LOAD CASE(S) Standard

December 11,2019

Continued on page 2

WARNING - Verify design parameters and READ NOTES ON THIS AND INCLUDED MITEK REFERENCE PAGE MII-7473 rev. 10/03/2015 BEFORE USE.
Design valid for use only with MiTek® connectors. This design is based only upon parameters shown, and is for an individual building component, not a truss system. Before use, the building designer must verify the applicability of design parameters and properly incorporate this design into the overall building design. Bracing indicated is to prevent buckling of individual truss web and/or chord members only. Additional temporary and permanent bracing is always required for stability and to prevent collapse with possible personal injury and property damage. For general guidance regarding the fabrication, storage, delivery, erection and bracing of trusses and truss systems, see ***ANSI/TPI1 Quality Criteria, DSB-89 and BCSI Building Component Safety Information*** available from Truss Plate Institute, 218 N. Lee Street, Suite 312, Alexandria, VA 22314.

MiTek USA, Inc.
400 Sunrise Avenue, Suite 270
Roseville, CA 95661

LOAD CASE(S) Standard

1) Dead + Snow (balanced): Lumber Increase=1.15, Plate Increase=1.15
   Uniform Loads (plf)
   Vert: 1-2=-88, 2-6=-88, 11-12=-20
   Concentrated Loads (lb)
   Vert: 15=-69 16=-76 18=-69 19=-49

WARNING - Verify design parameters and READ NOTES ON THIS AND INCLUDED MITEK REFERENCE PAGE MII-7473 rev. 10/03/2015 BEFORE USE.
Design valid for use only with MiTek® connectors. This design is based only upon parameters shown, and is for an individual building component, not a truss system. Before use, the building designer must verify the applicability of design parameters and properly incorporate this design into the overall building design. Bracing indicated is to prevent buckling of individual truss web and/or chord members only. Additional temporary and permanent bracing is always required for stability and to prevent collapse with possible personal injury and property damage. For general guidance regarding the fabrication, storage, delivery, erection and bracing of trusses and truss systems, see ***ANSI/TPI1 Quality Criteria, DSB-89 and BCSI Building Component Safety Information*** available from Truss Plate Institute, 218 N. Lee Street, Suite 312, Alexandria, VA 22314.

MiTek USA, Inc.
400 Sunrise Avenue, Suite 270
Roseville, CA 95661

Job	Truss	Truss Type	Qty	Ply	ESPINOZA R60548658
J19-319	G09	Roof Special	1	1	Job Reference (optional)

Stockton Truss, STOCKTON, CA 95215 8.330 s Dec 5 2019 MiTek Industries, Inc. Tue Dec 10 11:44:01 2019 Page 1
ID:eURouH3h5RzkGDllLuCRE8yWpf_-8GOqILs2P7703zCIZbudEpB5j68cPVdsENmnsLyANaS

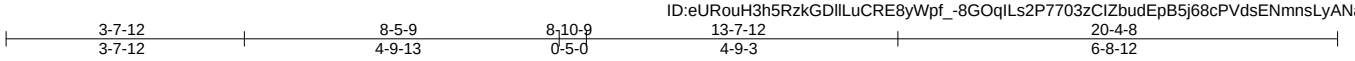

Scale = 1:35.3

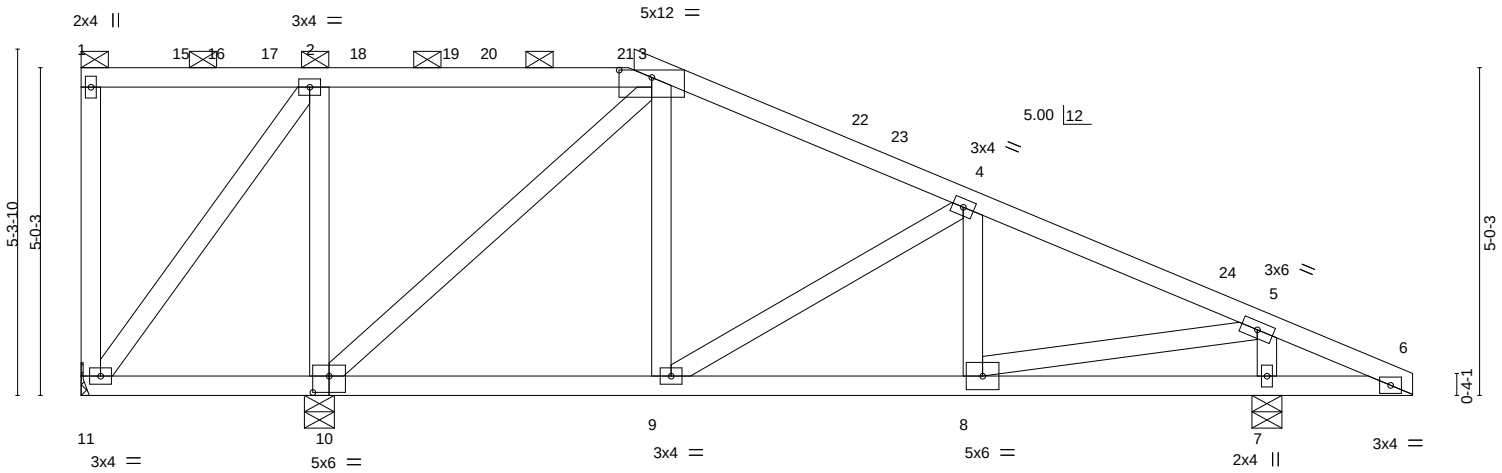

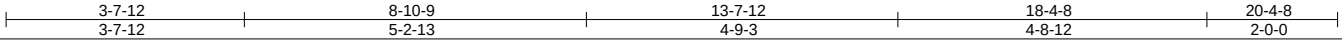

Plate Offsets (X,Y)-- [3:0-6-0,0-1-6], [10:0-3-0,0-3-0]

LOADING (psf)		SPACING-	2-0-0	CSI.		DEFL.	in	(loc)	l/defl	L/d	PLATES	GRIP
TCLL	30.0	Plate Grip DOL	1.15	TC	0.44	Vert(LL)	-0.03	8-9	>999	240	MT20	220/195
(Roof Snow=30.0)		Lumber DOL	1.15	BC	0.20	Vert(CT)	-0.07	8-9	>999	180		
TCDL	14.0	Rep Stress Incr	YES	WB	0.91	Horz(CT)	0.01	7	n/a	n/a		
BCLL	0.0 *	Code	IBC2015/TPI2014	Matrix-MSH		Wind(LL)	0.02	8-9	>999	360	Weight: 111 lb	FT = 20%
BCDL	10.0											

LUMBER-
TOP CHORD 2x4 DF No.1&Btr G
BOT CHORD 2x4 DF No.1&Btr G
WEBS 2x4 DF Std G

BRACING-
TOP CHORD Structural wood sheathing directly applied or 5-8-5 oc purlins, except end verticals, and 2-0-0 oc purlins (6-0-0 max.): 1-3.
BOT CHORD Rigid ceiling directly applied or 6-0-0 oc bracing.

REACTIONS. (lb/size) 11=66/Mechanical, 10=1459/0-5-8, 7=1033/0-5-8
Max Horz 11=-122(LC 15)
Max Uplift 11=-158(LC 37), 10=-226(LC 10), 7=-131(LC 11)
Max Grav 11=165(LC 28), 10=1705(LC 29), 7=1435(LC 29)

FORCES. (lb) - Max. Comp./Max. Ten. - All forces 250 (lb) or less except when shown.
TOP CHORD 3-4=-825/285, 4-5=-1327/423
BOT CHORD 9-10=-130/636, 8-9=-326/1122
WEBS 2-11=-49/261, 2-10=-858/143, 3-10=-1074/433, 3-9=-294/383, 4-9=-552/217, 5-8=-387/1286, 5-7=-1317/338

NOTES-
1) Wind: ASCE 7-10; Vult=110mph (3-second gust) Vasd=87mph; TCDL=7.2psf; BCDL=4.2psf; h=25ft; Cat. II; Exp C; Enclosed; MWFRS (envelope) and C-C Exterior(2) 0-1-12 to 3-1-12, Interior(1) 3-1-12 to 8-8-12, Exterior(2) 8-8-12 to 11-8-12, Interior(1) 11-8-12 to 20-4-8 zone; cantilever left and right exposed ; porch left and right exposed;C-C for members and forces & MWFRS for reactions shown; Lumber DOL=1.33 plate grip DOL=1.33
2) TCLL: ASCE 7-10; Pf=30.0 psf (flat roof snow); Category II; Exp C; Partially Exp.; Ct=1.00
3) Unbalanced snow loads have been considered for this design.
4) Provide adequate drainage to prevent water ponding.
5) This truss has been designed for a 10.0 psf bottom chord live load nonconcurrent with any other live loads.
6) * This truss has been designed for a live load of 20.0psf on the bottom chord in all areas where a rectangle 3-6-0 tall by 2-0-0 wide will fit between the bottom chord and any other members.
7) A plate rating reduction of 20% has been applied for the green lumber members.
8) Refer to girder(s) for truss to truss connections.
9) Provide mechanical connection (by others) of truss to bearing plate capable of withstanding 100 lb uplift at joint(s) except (jt=lb) 11=158, 10=226, 7=131.
10) Graphical purlin representation does not depict the size or the orientation of the purlin along the top and/or bottom chord.
11) Hanger(s) or other connection device(s) shall be provided sufficient to support concentrated load(s) 156 lb down and 84 lb up at 1-7-4, 150 lb down and 84 lb up at 2-11-8, 156 lb down and 84 lb up at 4-3-12, and 143 lb down and 81 lb up at 6-3-12, and 202 lb down and 119 lb up at 8-4-14 on top chord. The design/selection of such connection device(s) is the responsibility of others.
12) This truss is designed for a creep factor of 3.01, which is used to calculate the Vert(CT) deflection per ANSI/TPI 1.

LOAD CASE(S) Standard
1) Dead + Snow (balanced): Lumber Increase=1.15, Plate Increase=1.15

December 11,2019

Continued on page 2

WARNING - Verify design parameters and READ NOTES ON THIS AND INCLUDED MITEK REFERENCE PAGE MII-7473 rev. 10/03/2015 BEFORE USE.
Design valid for use only with MiTek® connectors. This design is based only upon parameters shown, and is for an individual building component, not a truss system. Before use, the building designer must verify the applicability of design parameters and properly incorporate this design into the overall building design. Bracing indicated is to prevent buckling of individual truss web and/or chord members only. Additional temporary and permanent bracing is always required for stability and to prevent collapse with possible personal injury and property damage. For general guidance regarding the fabrication, storage, delivery, erection and bracing of trusses and truss systems, see ***ANSI/TPI1 Quality Criteria, DSB-89 and BCSI Building Component Safety Information*** available from Truss Plate Institute, 218 N. Lee Street, Suite 312, Alexandria, VA 22314.

MiTek USA, Inc.
400 Sunrise Avenue, Suite 270
Roseville, CA 95661

LOAD CASE(S) Standard

Uniform Loads (plf)

Vert: 1-3=-88, 3-6=-88, 11-12=-20

Concentrated Loads (lb)

Vert: 15=-72 17=-66 18=-72 20=-63 21=-102

WARNING - Verify design parameters and READ NOTES ON THIS AND INCLUDED MITEK REFERENCE PAGE MII-7473 rev. 10/03/2015 BEFORE USE.

Design valid for use only with MiTek® connectors. This design is based only upon parameters shown, and is for an individual building component, not a truss system. Before use, the building designer must verify the applicability of design parameters and properly incorporate this design into the overall building design. Bracing indicated is to prevent buckling of individual truss web and/or chord members only. Additional temporary and permanent bracing is always required for stability and to prevent collapse with possible personal injury and property damage. For general guidance regarding the fabrication, storage, delivery, erection and bracing of trusses and truss systems, see ***ANSI/TPI1 Quality Criteria, DSB-89 and BCSI Building Component Safety Information*** available from Truss Plate Institute, 218 N. Lee Street, Suite 312, Alexandria, VA 22314.

MiTek USA, Inc.
400 Sunrise Avenue, Suite 270
Roseville, CA 95661

Job	Truss	Truss Type	Qty	Ply	ESPINOZA R60548659
J19-319	G10	Roof Special	1	1	Job Reference (optional)

Stockton Truss, STOCKTON, CA 95215 8.330 s Dec 5 2019 MiTek Industries, Inc. Tue Dec 10 11:44:02 2019 Page 1
ID:eURouH3h5RzkGDllLuCRE8yWpf_-cTyDWhtgARFth7nU7IPsn1k9aWTj85c?T1WKOnyANaR

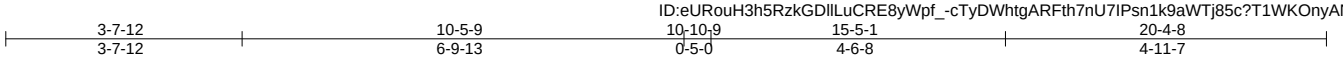

Scale = 1:35.5

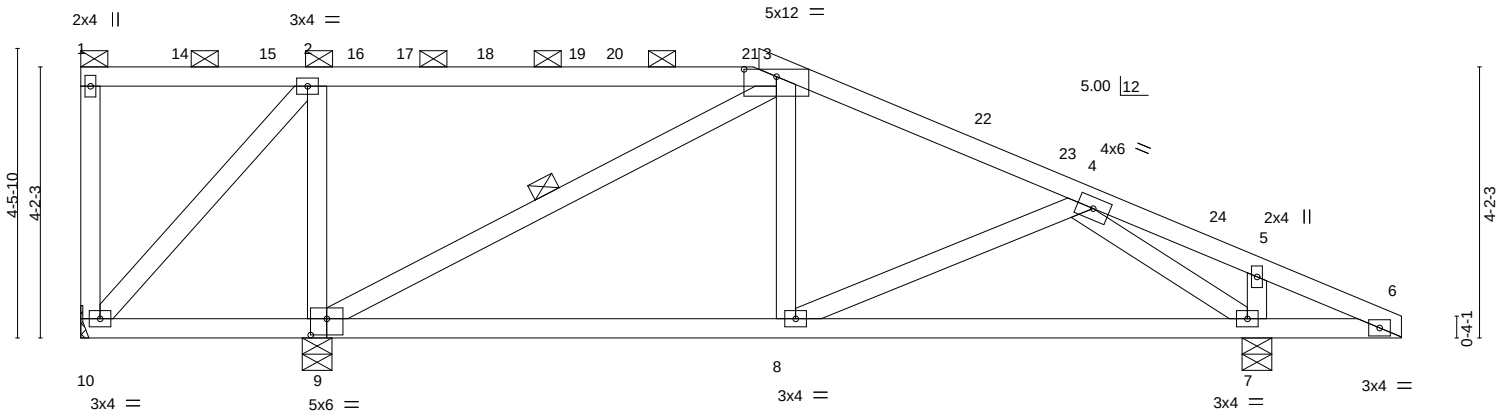

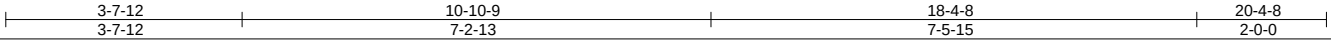

Plate Offsets (X,Y)-- [3:0-6-0,0-1-6], [9:0-3-0,0-3-0]

LOADING (psf)		SPACING-	2-0-0	CSI.		DEFL.	in	(loc)	l/defl	L/d	PLATES	GRIP
TCLL	30.0	Plate Grip DOL	1.15	TC	0.88	Vert(LL)	-0.04	7-8	>999	240	MT20	220/195
(Roof Snow=30.0)		Lumber DOL	1.15	BC	0.27	Vert(CT)	-0.12	7-8	>999	180		
TCDL	14.0	Rep Stress Incr	YES	WB	0.35	Horz(CT)	0.02	7	n/a	n/a		
BCLL	0.0 *	Code	IBC2015/TPI2014	Matrix-MSH		Wind(LL)	0.06	7-8	>999	360	Weight: 102 lb	FT = 20%
BCDL	10.0											

LUMBER-
TOP CHORD 2x4 DF No.1&Btr G
BOT CHORD 2x4 DF No.1&Btr G
WEBS 2x4 DF Std G

BRACING-
TOP CHORD Structural wood sheathing directly applied or 6-0-0 oc purlins, except end verticals, and 2-0-0 oc purlins (6-0-0 max.): 1-3.
BOT CHORD Rigid ceiling directly applied or 6-0-0 oc bracing.
WEBS 1 Row at midpt 3-9

REACTIONS. (lb/size) 10=28/Mechanical, 9=1313/0-5-8, 7=1051/0-5-8
Max Horz 10=-100(LC 15)
Max Uplift 10=-50(LC 33), 9=-221(LC 10), 7=-146(LC 11)
Max Grav 10=155(LC 28), 9=1406(LC 28), 7=1415(LC 29)

FORCES. (lb) - Max. Comp./Max. Ten. - All forces 250 (lb) or less except when shown.
TOP CHORD 3-4=-1074/432, 4-5=-16/328, 5-6=-34/303
BOT CHORD 8-9=-291/890, 7-8=-282/980
WEBS 2-9=-885/120, 3-9=-1096/474, 3-8=-264/271, 4-7=-1527/365, 5-7=-298/45

NOTES-
1) Wind: ASCE 7-10; Vult=110mph (3-second gust) Vasd=87mph; TCDL=7.2psf; BCDL=4.2psf; h=25ft; Cat. II; Exp C; Enclosed; MWFRS (envelope) and C-C Exterior(2) 0-1-12 to 3-1-12, Interior(1) 3-1-12 to 10-8-12, Exterior(2) 10-8-12 to 13-8-12, Interior(1) 13-8-12 to 20-4-8 zone; cantilever left and right exposed ; porch left and right exposed;C-C for members and forces & MWFRS for reactions shown; Lumber DOL=1.33 plate grip DOL=1.33
2) TCLL: ASCE 7-10; Pf=30.0 psf (flat roof snow); Category II; Exp C; Partially Exp.; Ct=1.00
3) Unbalanced snow loads have been considered for this design.
4) Provide adequate drainage to prevent water ponding.
5) This truss has been designed for a 10.0 psf bottom chord live load nonconcurrent with any other live loads.
6) * This truss has been designed for a live load of 20.0psf on the bottom chord in all areas where a rectangle 3-6-0 tall by 2-0-0 wide will fit between the bottom chord and any other members.
7) A plate rating reduction of 20% has been applied for the green lumber members.
8) Refer to girder(s) for truss to truss connections.
9) Provide mechanical connection (by others) of truss to bearing plate capable of withstanding 100 lb uplift at joint(s) 10 except (jt=lb) 9=221, 7=146.
10) Graphical purlin representation does not depict the size or the orientation of the purlin along the top and/or bottom chord.
11) Hanger(s) or other connection device(s) shall be provided sufficient to support concentrated load(s) 68 lb down and 56 lb up at 1-7-4, 41 lb down and 56 lb up at 2-11-8, 68 lb down and 56 lb up at 4-3-12, 167 lb down and 88 lb up at 6-3-12, and 165 lb down and 85 lb up at 8-3-12, and 141 lb down and 119 lb up at 10-4-14 on top chord. The design/selection of such connection device(s) is the responsibility of others.
12) This truss is designed for a creep factor of 3.01, which is used to calculate the Vert(CT) deflection per ANSI/TPI 1.

LOAD CASE(S) Standard
1) Dead + Snow (balanced): Lumber Increase=1.15, Plate Increase=1.15

December 11,2019

Continued on page 2

WARNING - Verify design parameters and READ NOTES ON THIS AND INCLUDED MITEK REFERENCE PAGE MII-7473 rev. 10/03/2015 BEFORE USE.
Design valid for use only with MiTek® connectors. This design is based only upon parameters shown, and is for an individual building component, not a truss system. Before use, the building designer must verify the applicability of design parameters and properly incorporate this design into the overall building design. Bracing indicated is to prevent buckling of individual truss web and/or chord members only. Additional temporary and permanent bracing is always required for stability and to prevent collapse with possible personal injury and property damage. For general guidance regarding the fabrication, storage, delivery, erection and bracing of trusses and truss systems, see ***ANSI/TPI1 Quality Criteria, DSB-89 and BCSI Building Component Safety Information*** available from Truss Plate Institute, 218 N. Lee Street, Suite 312, Alexandria, VA 22314.

MiTek USA, Inc.
400 Sunrise Avenue, Suite 270
Roseville, CA 95661

LOAD CASE(S) Standard

Uniform Loads (plf)

Vert: 1-3=-88, 3-6=-88, 10-11=-20

Concentrated Loads (lb)

Vert: 18=-83 20=-84 21=-41

WARNING - Verify design parameters and READ NOTES ON THIS AND INCLUDED MITEK REFERENCE PAGE MII-7473 rev. 10/03/2015 BEFORE USE.

Design valid for use only with MiTek® connectors. This design is based only upon parameters shown, and is for an individual building component, not a truss system. Before use, the building designer must verify the applicability of design parameters and properly incorporate this design into the overall building design. Bracing indicated is to prevent buckling of individual truss web and/or chord members only. Additional temporary and permanent bracing is always required for stability and to prevent collapse with possible personal injury and property damage. For general guidance regarding the fabrication, storage, delivery, erection and bracing of trusses and truss systems, see ***ANSI/TPI1 Quality Criteria, DSB-89 and BCSI Building Component Safety Information*** available from Truss Plate Institute, 218 N. Lee Street, Suite 312, Alexandria, VA 22314.

MiTek USA, Inc.
400 Sunrise Avenue, Suite 270
Roseville, CA 95661

Job	Truss	Truss Type	Qty	Ply	ESPINOZA
J19-319	G11	Roof Special Girder	1	1	R60548660

Job Reference (optional)

Stockton Truss, STOCKTON, CA 95215 8.330 s Dec 5 2019 MiTek Industries, Inc. Tue Dec 10 11:44:04 2019 Page 1

ID:eURouH3h5RzkGDllLuCRE8yWpf_-Yr4zxNuxh2VbwRxsEjRKsSpaoK9fcxjIwL?RTgyANaP

3-7-12	8-4-12	12-5-9	12-10-9	16-2-10	20-4-8
3-7-12	4-9-0	4-0-13	0-5-0	3-4-1	4-1-14

Scale = 1:34.5

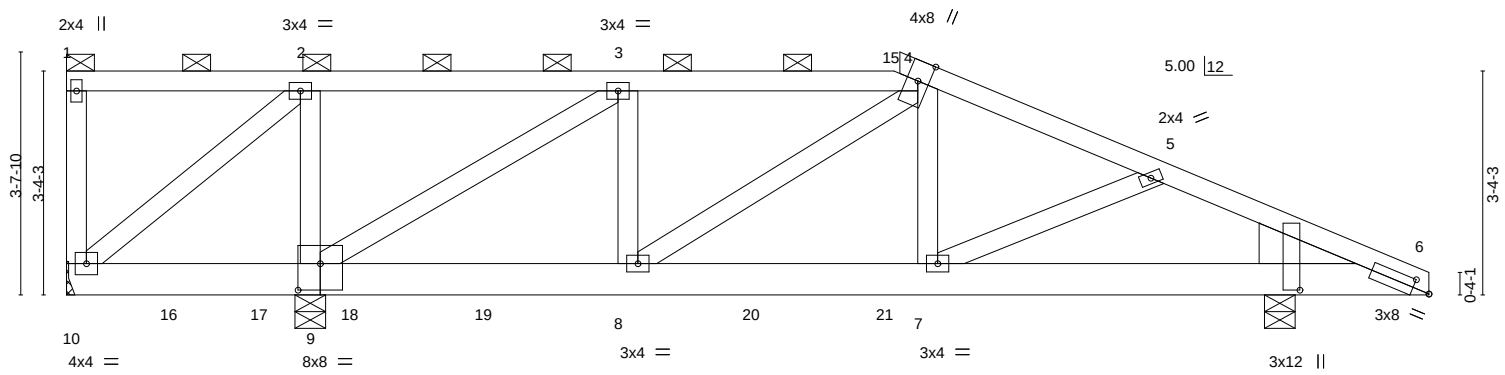

3-7-12	8-4-12	12-10-9	18-4-8	20-4-8
3-7-12	4-9-0	4-5-13	5-5-15	2-0-0

Plate Offsets (X,Y)-- [6:0-0-11,1-11-3], [6:0-3-1,0-1-8], [9:0-4-0,0-4-12]

LOADING (psf)		SPACING-	2-0-0	CSI.		DEFL.	in	(loc)	l/defl	L/d	PLATES	GRIP
TCLL	30.0	Plate Grip DOL	1.15	TC	0.58	Vert(LL)	-0.03	7-8	>999	240	MT20	220/195
(Roof Snow=30.0)		Lumber DOL	1.15	BC	0.30	Vert(CT)	-0.06	7-8	>999	180		
TCDL	14.0	Rep Stress Incr	NO	WB	0.63	Horz(CT)	0.01	6	n/a	n/a		
BCLL	0.0 *	Code IBC2015/TPI2014		Matrix-MSH		Wind(LL)	0.02	7-8	>999	360	Weight: 117 lb	FT = 20%
BCDL	10.0											

LUMBER-

TOP CHORD 2x4 DF No.1&Btr G
BOT CHORD 2x6 DF SS G
WEBS 2x4 DF Std G
WEDGE
Right: 2x8 DF SS

BRACING-

TOP CHORD Structural wood sheathing directly applied or 6-0-0 oc purlins, except end verticals, and 2-0-0 oc purlins (6-0-0 max.): 1-4.
BOT CHORD Rigid ceiling directly applied or 10-0-0 oc bracing, Except: 6-0-0 oc bracing: 9-10.

REACTIONS. (lb/size) 10=207/Mechanical, 9=2316/0-5-8, 6=920/0-5-8
Max Horz 10=-79(LC 11)
Max Uplift 10=-147(LC 33), 9=-563(LC 6), 6=-192(LC 6)
Max Grav 10=275(LC 23), 9=2705(LC 24), 6=1140(LC 25)

FORCES. (lb) - Max. Comp./Max. Ten. - All forces 250 (lb) or less except when shown.
TOP CHORD 2-3=-57/282, 3-4=-749/199, 4-5=-811/252, 5-6=-757/188
BOT CHORD 9-10=-259/112, 8-9=-140/749, 7-8=-182/755, 6-7=-123/572
WEBS 2-10=-73/359, 2-9=-829/100, 3-9=-1201/304, 4-8=-267/64

NOTES-

1) Wind: ASCE 7-10; Vult=110mph (3-second gust) Vasd=87mph; TCDL=7.2psf; BCDL=4.2psf; h=25ft; Cat. II; Exp C; Enclosed; MWFRS (envelope); cantilever left and right exposed ; porch left and right exposed; Lumber DOL=1.33 plate grip DOL=1.33
2) TCLL: ASCE 7-10; Pf=30.0 psf (flat roof snow); Category II; Exp C; Partially Exp.; Ct=1.00
3) Unbalanced snow loads have been considered for this design.
4) Provide adequate drainage to prevent water ponding.
5) This truss has been designed for a 10.0 psf bottom chord live load nonconcurrent with any other live loads.
6) * This truss has been designed for a live load of 20.0psf on the bottom chord in all areas where a rectangle 3-6-0 tall by 2-0-0 wide will fit between the bottom chord and any other members.
7) A plate rating reduction of 20% has been applied for the green lumber members.
8) Refer to girder(s) for truss to truss connections.
9) Provide mechanical connection (by others) of truss to bearing plate capable of withstanding 100 lb uplift at joint(s) except (jt=lb) 10=147, 9=563, 6=192.
10) Graphical purlin representation does not depict the size or the orientation of the purlin along the top and/or bottom chord.
11) Hanger(s) or other connection device(s) shall be provided sufficient to support concentrated load(s) 30 lb down and 101 lb up at 12-4-14 on top chord, and 453 lb down and 108 lb up at 1-7-4, 453 lb down and 111 lb up at 2-11-8, 453 lb down and 108 lb up at 4-3-12, 26 lb up at 6-3-12, 26 lb up at 8-3-12, and 26 lb up at 10-3-12, and 26 lb up at 12-3-12 on bottom chord. The design/selection of such connection device(s) is the responsibility of others.
12) This truss is designed for a creep factor of 3.01, which is used to calculate the Vert(CT) deflection per ANSI/TPI 1.
13) In the LOAD CASE(S) section, loads applied to the face of the truss are noted as front (F) or back (B).

LOAD CASE(S) Standard

December 11,2019

Continued on page 2

WARNING - Verify design parameters and READ NOTES ON THIS AND INCLUDED MITEK REFERENCE PAGE MII-7473 rev. 10/03/2015 BEFORE USE.
Design valid for use only with MiTek® connectors. This design is based only upon parameters shown, and is for an individual building component, not a truss system. Before use, the building designer must verify the applicability of design parameters and properly incorporate this design into the overall building design. Bracing indicated is to prevent buckling of individual truss web and/or chord members only. Additional temporary and permanent bracing is always required for stability and to prevent collapse with possible personal injury and property damage. For general guidance regarding the fabrication, storage, delivery, erection and bracing of trusses and truss systems, see ***ANSI/TPI1 Quality Criteria, DSB-89 and BCSI Building Component Safety Information*** available from Truss Plate Institute, 218 N. Lee Street, Suite 312, Alexandria, VA 22314.

MiTek USA, Inc.
400 Sunrise Avenue, Suite 270
Roseville, CA 95661

LOAD CASE(S) Standard

1) Dead + Snow (balanced): Lumber Increase=1.15, Plate Increase=1.15
   Uniform Loads (plf)
   Vert: 1-4=-88, 4-6=-88, 6-10=-20
   Concentrated Loads (lb)
   Vert: 8=25(F) 16=-453(F) 17=-453(F) 18=-453(F) 19=25(F) 20=25(F) 21=25(F)

WARNING - Verify design parameters and READ NOTES ON THIS AND INCLUDED MITEK REFERENCE PAGE MII-7473 rev. 10/03/2015 BEFORE USE.
Design valid for use only with MiTek® connectors. This design is based only upon parameters shown, and is for an individual building component, not a truss system. Before use, the building designer must verify the applicability of design parameters and properly incorporate this design into the overall building design. Bracing indicated is to prevent buckling of individual truss web and/or chord members only. Additional temporary and permanent bracing is always required for stability and to prevent collapse with possible personal injury and property damage. For general guidance regarding the fabrication, storage, delivery, erection and bracing of trusses and truss systems, see ***ANSI/TPI1 Quality Criteria, DSB-89 and BCSI Building Component Safety Information*** available from Truss Plate Institute, 218 N. Lee Street, Suite 312, Alexandria, VA 22314.

MiTek USA, Inc.
400 Sunrise Avenue, Suite 270
Roseville, CA 95661

Job	Truss	Truss Type	Qty	Ply	ESPINOZA R60548661
J19-319	H01	Common Girder	1	1	Job Reference (optional)

Stockton Truss, STOCKTON, CA 95215 8.330 s Dec 5 2019 MiTek Industries, Inc. Tue Dec 10 11:44:05 2019 Page 1
ID:eURouH3h5RzkGDllLuCRE8yWpf_-02dL8jvZSMdSYaV3oQyZPfMkfjL3LO2R9?k??6yANaO

4-7-6	8-11-3	13-3-0	17-11-10	22-8-5	28-6-0
4-7-6	4-3-13	4-3-13	4-8-10	4-8-10	5-9-11

Scale = 1:48.5

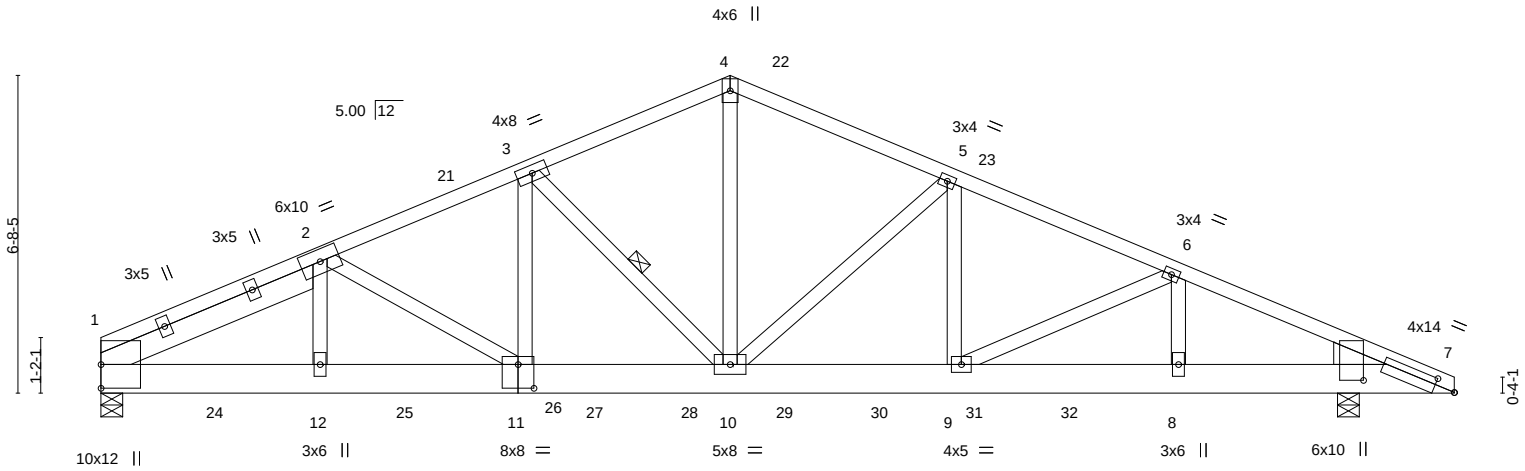

4-7-6	8-11-3	13-3-0	17-11-10	22-8-5	26-6-0	28-6-0
4-7-6	4-3-13	4-3-13	4-8-10	4-8-10	3-9-11	2-0-0

Plate Offsets (X,Y)-- [7:0-3-1,1-10-15], [7:0-5-3,0-1-10], [11:0-4-0,0-6-0]

LOADING (psf)		SPACING-	2-0-0	CSI.		DEFL.	in	(loc)	l/defl	L/d	PLATES	GRIP
TCLL	30.0	Plate Grip DOL	1.15	TC	0.63	Vert(LL)	-0.17	10-11	>999	240	MT20	220/195
(Roof Snow=30.0)		Lumber DOL	1.15	BC	0.93	Vert(CT)	-0.36	10-11	>961	180		
TCDL	14.0	Rep Stress Incr	NO	WB	0.62	Horz(CT)	0.09	7	n/a	n/a		
BCLL	0.0 *	Code	IBC2015/TPI2014	Matrix-MSH		Wind(LL)	0.09	10-11	>999	360	Weight: 189 lb	FT = 20%
BCDL	10.0											

LUMBER-
TOP CHORD 2x4 DF No.1&Btr G
BOT CHORD 2x8 DF SS
WEBS 2x4 DF Std G *Except*
4-10: 2x4 DF No.1&Btr G
WEDGE
Right: 2x6 DF SS -G
SLIDER Left 2x6 DF SS -G-H 4-11-3

BRACING-
TOP CHORD Structural wood sheathing directly applied or 2-8-9 oc purlins.
BOT CHORD Rigid ceiling directly applied or 9-2-13 oc bracing.
WEBS 1 Row at midpt 3-10

REACTIONS. (lb/size) 1=3405/0-5-8, 7=2781/0-5-8
Max Horz 1=-74(LC 11)
Max Uplift 1=-576(LC 7), 7=-482(LC 6)

FORCES. (lb) - Max. Comp./Max. Ten. - All forces 250 (lb) or less except when shown.
TOP CHORD 1-2=-1387/244, 2-3=-5072/936, 3-4=-3690/747, 4-5=-3698/741, 5-6=-4321/831, 6-7=-3515/653
BOT CHORD 1-12=-846/5068, 11-12=-842/5050, 10-11=-775/4575, 9-10=-689/3943, 8-9=-551/3154, 7-8=-551/3154
WEBS 2-12=-126/570, 2-11=-511/88, 3-11=-257/1403, 3-10=-1913/296, 4-10=-527/2450, 5-10=-930/159, 5-9=-172/332, 6-9=-159/888, 6-8=-913/145

NOTES-
1) Wind: ASCE 7-10; Vult=110mph (3-second gust) Vasd=87mph; TCDL=7.2psf; BCDL=4.2psf; h=25ft; Cat. II; Exp C; Enclosed; MWFRS (envelope); cantilever left and right exposed ; porch left and right exposed; Lumber DOL=1.33 plate grip DOL=1.33
2) TCLL: ASCE 7-10; Pf=30.0 psf (flat roof snow); Category II; Exp C; Partially Exp.; Ct=1.00
3) Unbalanced snow loads have been considered for this design.
4) This truss has been designed for a 10.0 psf bottom chord live load nonconcurrent with any other live loads.
5) * This truss has been designed for a live load of 20.0psf on the bottom chord in all areas where a rectangle 3-6-0 tall by 2-0-0 wide will fit between the bottom chord and any other members.
6) A plate rating reduction of 20% has been applied for the green lumber members.
7) Provide mechanical connection (by others) of truss to bearing plate capable of withstanding 100 lb uplift at joint(s) except (jt=lb) 1=576, 7=482.
8) Hanger(s) or other connection device(s) shall be provided sufficient to support concentrated load(s) 68 lb down and 192 lb up at 14-0-8 on top chord, and 445 lb down and 101 lb up at 2-5-4, 445 lb down and 101 lb up at 4-5-4, 445 lb down and 101 lb up at 6-5-4, 445 lb down and 101 lb up at 8-5-4, 445 lb down and 101 lb up at 10-5-4, 177 lb down and 206 lb up at 12-5-4, 213 lb down and 149 lb up at 14-5-4, 145 lb down and 149 lb up at 16-5-4, and 136 lb down and 65 lb up at 18-5-4, and 255 lb down and 142 lb up at 20-5-4 on bottom chord. The design/selection of such connection device(s) is the responsibility of others.
9) This truss is designed for a creep factor of 3.01, which is used to calculate the Vert(CT) deflection per ANSI/TPI 1.
10) In the LOAD CASE(S) section, loads applied to the face of the truss are noted as front (F) or back (B).

LOAD CASE(S) Standard

December 11,2019

Continued on page 2

WARNING - Verify design parameters and READ NOTES ON THIS AND INCLUDED MITEK REFERENCE PAGE MII-7473 rev. 10/03/2015 BEFORE USE.
Design valid for use only with MiTek® connectors. This design is based only upon parameters shown, and is for an individual building component, not a truss system. Before use, the building designer must verify the applicability of design parameters and properly incorporate this design into the overall building design. Bracing indicated is to prevent buckling of individual truss web and/or chord members only. Additional temporary and permanent bracing is always required for stability and to prevent collapse with possible personal injury and property damage. For general guidance regarding the fabrication, storage, delivery, erection and bracing of trusses and truss systems, see ***ANSI/TPI1 Quality Criteria, DSB-89 and BCSI Building Component Safety Information*** available from Truss Plate Institute, 218 N. Lee Street, Suite 312, Alexandria, VA 22314.

MiTek USA, Inc.
400 Sunrise Avenue, Suite 270
Roseville, CA 95661

LOAD CASE(S) Standard

1) Dead + Snow (balanced): Lumber Increase=1.15, Plate Increase=1.15
   Uniform Loads (plf)
   Vert: 1-4=-88, 4-7=-88, 7-13=-20
   Concentrated Loads (lb)
   Vert: 12=-445(B) 22=41(B) 24=-445(B) 25=-445(B) 26=-445(B) 27=-445(B) 28=-177(B) 29=-213(B) 30=-145(B) 31=-136(B) 32=-255(B)

WARNING - Verify design parameters and READ NOTES ON THIS AND INCLUDED MITEK REFERENCE PAGE MII-7473 rev. 10/03/2015 BEFORE USE.
Design valid for use only with MiTek® connectors. This design is based only upon parameters shown, and is for an individual building component, not a truss system. Before use, the building designer must verify the applicability of design parameters and properly incorporate this design into the overall building design. Bracing indicated is to prevent buckling of individual truss web and/or chord members only. Additional temporary and permanent bracing is always required for stability and to prevent collapse with possible personal injury and property damage. For general guidance regarding the fabrication, storage, delivery, erection and bracing of trusses and truss systems, see ***ANSI/TPI1 Quality Criteria, DSB-89 and BCSI Building Component Safety Information*** available from Truss Plate Institute, 218 N. Lee Street, Suite 312, Alexandria, VA 22314.

MiTek USA, Inc.
400 Sunrise Avenue, Suite 270
Roseville, CA 95661

Job	Truss	Truss Type	Qty	Ply	ESPINOZA R60548662
J19-319	H02	Common	4	1	Job Reference (optional)

Stockton Truss, STOCKTON, CA 95215 8.330 s Dec 5 2019 MiTek Industries, Inc. Tue Dec 10 11:44:06 2019 Page 1
ID:eURouH3h5RzkGDllLuCRE8yWpf_-UEBjL2wBDflJAk4FM8Uoxtut47qO4opbOfUYXYyANaN

6-9-5	13-3-0	18-1-5	22-11-9	28-6-0
6-9-5	6-5-12	4-10-5	4-10-5	5-6-7

Scale: 1/4"=1'

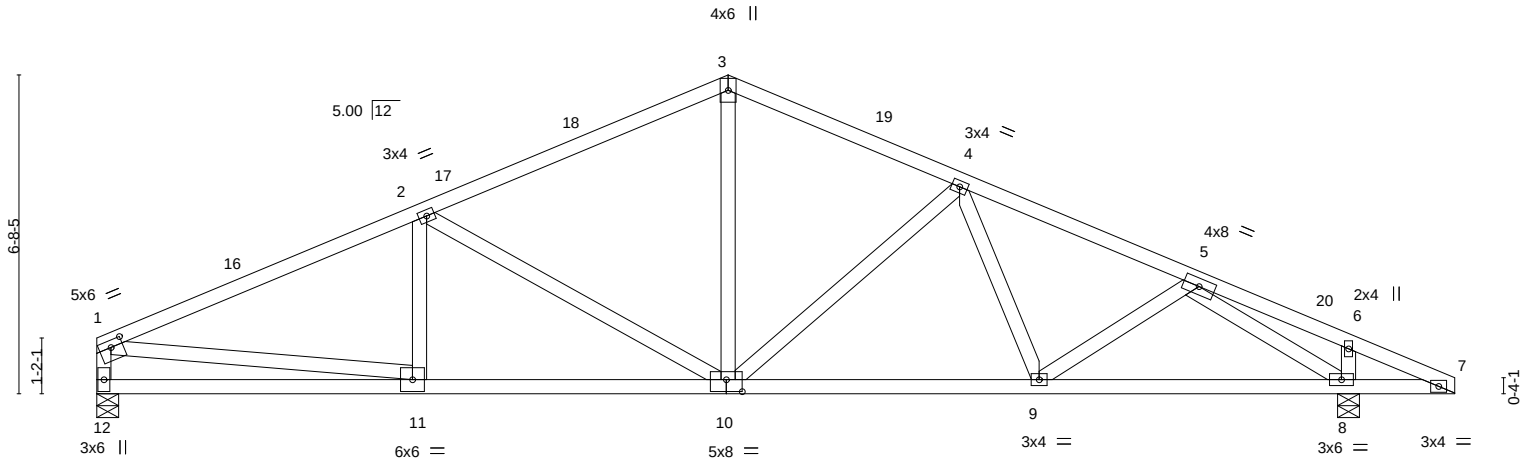

6-9-5	13-3-0	19-9-5	26-3-4	26-6-0 28-6-0
6-9-5	6-5-12	6-6-5	6-5-15	0-2-12 2-0-0

Plate Offsets (X,Y)-- [1:0-3-0,0-1-12], [10:0-4-0,0-3-0]

LOADING (psf)		SPACING-	2-0-0	CSI.		DEFL.	in	(loc)	l/defl	L/d	PLATES	GRIP
TCLL	30.0	Plate Grip DOL	1.15	TC	0.72	Vert(LL)	-0.08	10-11	>999	240	MT20	220/195
(Roof Snow=30.0)		Lumber DOL	1.15	BC	0.35	Vert(CT)	-0.23	9-10	>999	180		
TCDL	14.0	Rep Stress Incr	YES	WB	0.78	Horz(CT)	0.07	8	n/a	n/a		
BCLL	0.0 *	Code	IBC2015/TPI2014	Matrix-MSH		Wind(LL)	0.08	9-10	>999	360	Weight: 141 lb	FT = 20%
BCDL	10.0											

LUMBER-
TOP CHORD 2x4 DF No.1&Btr G
BOT CHORD 2x4 DF No.1&Btr G
WEBS 2x4 DF Std G

BRACING-
TOP CHORD Structural wood sheathing directly applied or 3-9-10 oc purlins, except end verticals.
BOT CHORD Rigid ceiling directly applied or 6-0-0 oc bracing.

REACTIONS. (lb/size) 12=1400/0-5-8, 8=1662/0-5-8
Max Horz 12=-75(LC 15)
Max Uplift 12=-184(LC 11), 8=-216(LC 11)

FORCES. (lb) - Max. Comp./Max. Ten. - All forces 250 (lb) or less except when shown.
TOP CHORD 1-2=-2256/984, 2-3=-1703/795, 3-4=-1661/788, 4-5=-2043/945, 1-12=-1330/543
BOT CHORD 11-12=-112/260, 10-11=-815/1990, 9-10=-721/1812, 8-9=-654/1658
WEBS 2-10=-739/302, 3-10=-497/764, 4-10=-592/228, 1-11=-725/1769, 5-8=-2129/817, 6-8=-283/83

NOTES-
1) Wind: ASCE 7-10; Vult=110mph (3-second gust) Vasd=87mph; TCDL=7.2psf; BCDL=4.2psf; h=25ft; Cat. II; Exp C; Enclosed; MWFRS (envelope) and C-C Exterior(2) 0-1-13 to 3-1-13, Interior(1) 3-1-13 to 13-3-0, Exterior(2) 13-3-0 to 16-3-0, Interior(1) 16-3-0 to 28-6-0 zone; cantilever left and right exposed ; porch left and right exposed;C-C for members and forces & MWFRS for reactions shown; Lumber DOL=1.33 plate grip DOL=1.33
2) TCLL: ASCE 7-10; Pf=30.0 psf (flat roof snow); Category II; Exp C; Partially Exp.; Ct=1.00
3) Unbalanced snow loads have been considered for this design.
4) This truss has been designed for a 10.0 psf bottom chord live load nonconcurrent with any other live loads.
5) * This truss has been designed for a live load of 20.0psf on the bottom chord in all areas where a rectangle 3-6-0 tall by 2-0-0 wide will fit between the bottom chord and any other members.
6) A plate rating reduction of 20% has been applied for the green lumber members.
7) Provide mechanical connection (by others) of truss to bearing plate capable of withstanding 100 lb uplift at joint(s) except (jt=lb) 12=184, 8=216.
8) This truss is designed for a creep factor of 3.01, which is used to calculate the Vert(CT) deflection per ANSI/TPI 1.

December 11,2019

WARNING - Verify design parameters and READ NOTES ON THIS AND INCLUDED MITEK REFERENCE PAGE MII-7473 rev. 10/03/2015 BEFORE USE.
Design valid for use only with MiTek® connectors. This design is based only upon parameters shown, and is for an individual building component, not a truss system. Before use, the building designer must verify the applicability of design parameters and properly incorporate this design into the overall building design. Bracing indicated is to prevent buckling of individual truss web and/or chord members only. Additional temporary and permanent bracing is always required for stability and to prevent collapse with possible personal injury and property damage. For general guidance regarding the fabrication, storage, delivery, erection and bracing of trusses and truss systems, see ***ANSI/TPI1 Quality Criteria, DSB-89 and BCSI Building Component Safety Information*** available from Truss Plate Institute, 218 N. Lee Street, Suite 312, Alexandria, VA 22314.

MiTek USA, Inc.
400 Sunrise Avenue, Suite 270
Roseville, CA 95661

Job	Truss	Truss Type	Qty	Ply	ESPINOZA R60548663
J19-319	H03	California	1	1	Job Reference (optional)

Stockton Truss, STOCKTON, CA 95215 8.330 s Dec 5 2019 MiTek Industries, Inc. Tue Dec 10 11:44:08 2019 Page 1

ID:eURouH3h5RzkGDllLuCRE8yWpf_-RcJUmkxRlH?1P2EeTZWG0I_CHxTsYnvuryzfcRyANaL

5-9-2	11-5-15	11-10-15	14-7-1	15-0-1	20-8-14	24-3-9	28-6-0
5-9-2	5-8-13	0-5-0	2-8-2	0-5-0	5-8-13	3-6-11	4-2-7

Scale = 1:50.4

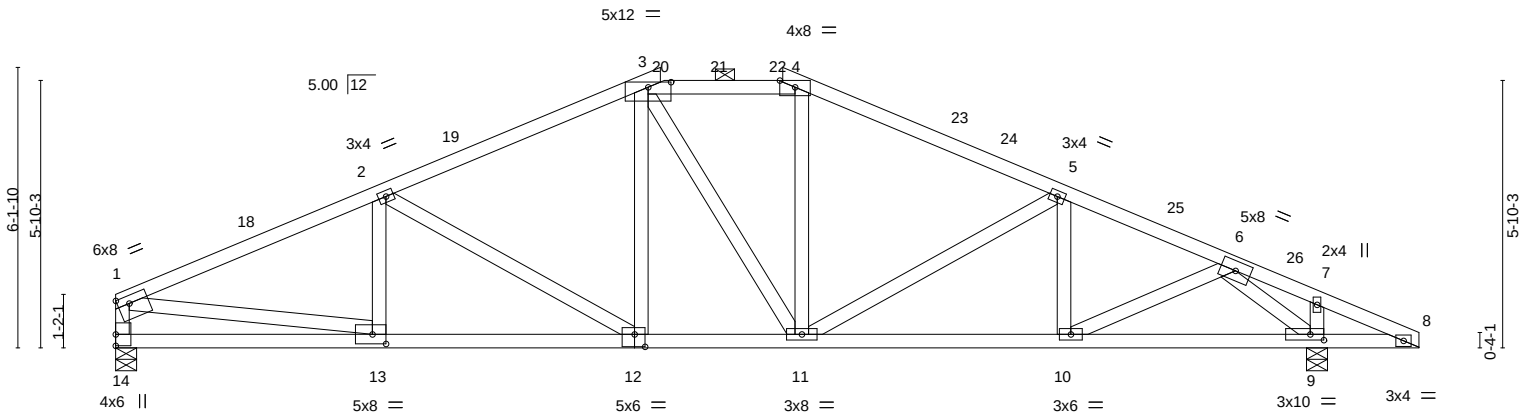

5-9-2	11-5-15	15-0-1	20-8-14	26-6-0	28-6-0
5-9-2	5-8-13	3-6-2	5-8-13	5-9-2	2-0-0

Plate Offsets (X,Y)-- [1:Edge,0-2-0], [3:0-6-0,0-1-6], [4:0-4-0,0-1-12], [9:0-3-9,0-1-8], [12:0-2-12,0-3-4], [13:0-3-9,0-2-8]

LOADING (psf)		SPACING-	2-0-0	CSI.		DEFL.	in	(loc)	l/defl	L/d	PLATES	GRIP
TCLL	30.0	Plate Grip DOL	1.15	TC	0.80	Vert(LL)	-0.14	12-13	>999	240	MT20	220/195
(Roof Snow=30.0)		Lumber DOL	1.15	BC	0.48	Vert(CT)	-0.28	12-13	>999	180		
TCDL	14.0	Rep Stress Incr	YES	WB	0.49	Horz(CT)	0.09	9	n/a	n/a		
BCLL	0.0 *	Code	IBC2015/TPI2014	Matrix-MSH		Wind(LL)	0.08	12-13	>999	360	Weight: 149 lb	FT = 20%
BCDL	10.0											

LUMBER-

TOP CHORD 2x4 DF No.1&Btr G
BOT CHORD 2x4 DF No.1&Btr G
WEBS 2x4 DF Std G *Except*
1-13: 2x4 DF No.1&Btr G

BRACING-

TOP CHORD Structural wood sheathing directly applied or 2-9-9 oc purlins, except end verticals, and 2-0-0 oc purlins (4-0-9 max.): 3-4.
BOT CHORD Rigid ceiling directly applied or 6-0-0 oc bracing.

REACTIONS. (lb/size) 14=1619/0-5-8, 9=1882/0-5-8
Max Horz 14=-68(LC 15)
Max Uplift 14=-232(LC 11), 9=-264(LC 11)
Max Grav 14=2166(LC 32), 9=2547(LC 32)

FORCES. (lb) - Max. Comp./Max. Ten. - All forces 250 (lb) or less except when shown.
TOP CHORD 1-2=-3498/1007, 2-3=-3022/897, 3-4=-2590/839, 4-5=-2957/876, 5-6=-3267/980, 7-8=-52/276, 1-14=-2100/573
BOT CHORD 13-14=-70/274, 12-13=-854/3109, 11-12=-665/2644, 10-11=-832/2980, 9-10=-527/1985
WEBS 2-13=-367/63, 2-12=-543/205, 3-12=-234/365, 3-11=-289/80, 4-11=-274/436, 5-11=-484/204, 5-10=-379/52, 6-10=-338/1103, 1-13=-805/2874, 6-9=-2951/763, 7-9=-404/89

NOTES-

1) Wind: ASCE 7-10; Vult=110mph (3-second gust) Vasd=87mph; TCDL=7.2psf; BCDL=4.2psf; h=25ft; Cat. II; Exp C; Enclosed; MWFRS (envelope) and C-C Exterior(2) 0-1-12 to 3-1-12, Interior(1) 3-1-12 to 11-7-12, Exterior(2) 11-7-12 to 19-2-15, Interior(1) 19-2-15 to 28-6-0 zone; cantilever left and right exposed ; porch left and right exposed;C-C for members and forces & MWFRS for reactions shown; Lumber DOL=1.33 plate grip DOL=1.33
2) TCLL: ASCE 7-10; Pf=30.0 psf (flat roof snow); Category II; Exp C; Partially Exp.; Ct=1.00
3) Unbalanced snow loads have been considered for this design.
4) Provide adequate drainage to prevent water ponding.
5) This truss has been designed for a 10.0 psf bottom chord live load nonconcurrent with any other live loads.
6) * This truss has been designed for a live load of 20.0psf on the bottom chord in all areas where a rectangle 3-6-0 tall by 2-0-0 wide will fit between the bottom chord and any other members.
7) A plate rating reduction of 20% has been applied for the green lumber members.
8) Provide mechanical connection (by others) of truss to bearing plate capable of withstanding 100 lb uplift at joint(s) except (jt=lb) 14=232, 9=264.
9) Graphical purlin representation does not depict the size or the orientation of the purlin along the top and/or bottom chord.
10) Hanger(s) or other connection device(s) shall be provided sufficient to support concentrated load(s) 312 lb down and 142 lb up at 11-11-10, and 116 lb down and 64 lb up at 13-3-0, and 312 lb down and 142 lb up at 14-6-6 on top chord. The design/selection of such connection device(s) is the responsibility of others.
11) This truss is designed for a creep factor of 3.01, which is used to calculate the Vert(CT) deflection per ANSI/TPI 1.

LOAD CASE(S) Standard

December 11,2019

Continued on page 2

WARNING - Verify design parameters and READ NOTES ON THIS AND INCLUDED MITEK REFERENCE PAGE MII-7473 rev. 10/03/2015 BEFORE USE.
Design valid for use only with MiTek® connectors. This design is based only upon parameters shown, and is for an individual building component, not a truss system. Before use, the building designer must verify the applicability of design parameters and properly incorporate this design into the overall building design. Bracing indicated is to prevent buckling of individual truss web and/or chord members only. Additional temporary and permanent bracing is always required for stability and to prevent collapse with possible personal injury and property damage. For general guidance regarding the fabrication, storage, delivery, erection and bracing of trusses and truss systems, see ***ANSI/TPI1 Quality Criteria, DSB-89 and BCSI Building Component Safety Information*** available from Truss Plate Institute, 218 N. Lee Street, Suite 312, Alexandria, VA 22314.

MiTek USA, Inc.
400 Sunrise Avenue, Suite 270
Roseville, CA 95661

LOAD CASE(S) Standard

1) Dead + Snow (balanced): Lumber Increase=1.15, Plate Increase=1.15
   Uniform Loads (plf)
   Vert: 1-3=-88, 3-4=-88, 4-8=-88, 14-15=-20
   Concentrated Loads (lb)
   Vert: 20=-193 21=-52 22=-193

WARNING - Verify design parameters and READ NOTES ON THIS AND INCLUDED MITEK REFERENCE PAGE MII-7473 rev. 10/03/2015 BEFORE USE.
Design valid for use only with MiTek® connectors. This design is based only upon parameters shown, and is for an individual building component, not a truss system. Before use, the building designer must verify the applicability of design parameters and properly incorporate this design into the overall building design. Bracing indicated is to prevent buckling of individual truss web and/or chord members only. Additional temporary and permanent bracing is always required for stability and to prevent collapse with possible personal injury and property damage. For general guidance regarding the fabrication, storage, delivery, erection and bracing of trusses and truss systems, see ***ANSI/TPI1 Quality Criteria, DSB-89 and BCSI Building Component Safety Information*** available from Truss Plate Institute, 218 N. Lee Street, Suite 312, Alexandria, VA 22314.

MiTek USA, Inc.
400 Sunrise Avenue, Suite 270
Roseville, CA 95661

Job	Truss	Truss Type	Qty	Ply	ESPINOZA R60548664
J19-319	H04	California	1	1	Job Reference (optional)

Stockton Truss, STOCKTON, CA 95215 8.330 s Dec 5 2019 MiTek Industries, Inc. Tue Dec 10 11:44:10 2019 Page 1

ID:eURouH3h5RzkGDllLuCRE8yWpf_-N?REBQzhHuGleMO0b_Yk6j3ZCk9W0iwAIGSmgJyANaJ

4-9-2	9-5-15	9-10-15	13-3-0	16-7-1	17-0-1	22-6-9	28-6-0
4-9-2	4-8-13	0-5-0	3-4-1	3-4-1	0-5-0	5-6-8	5-11-7

Scale = 1:49.7

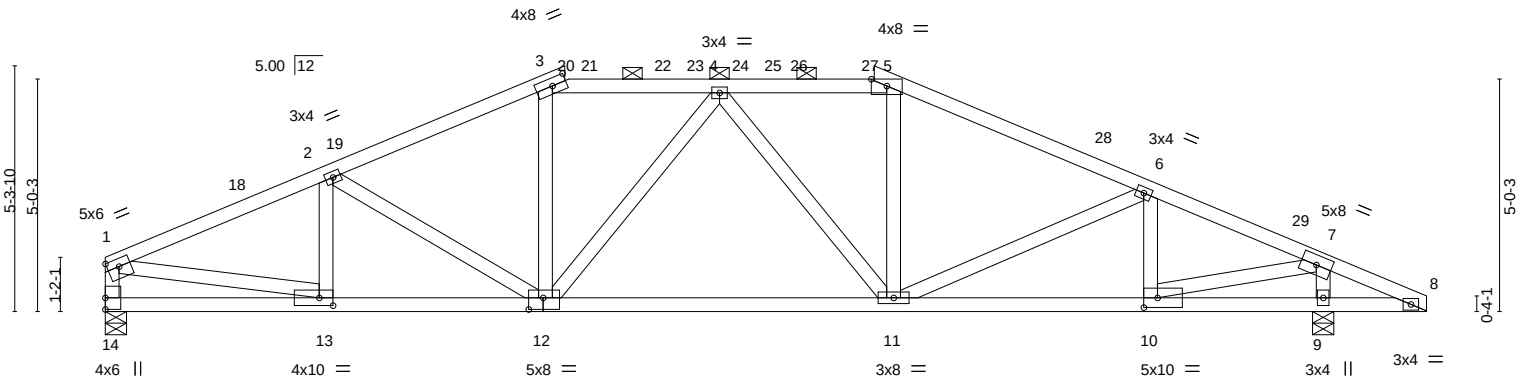

4-9-2	9-5-15	17-0-1	22-6-9	26-6-0	28-6-0
4-9-2	4-8-13	7-6-2	5-6-8	3-11-7	2-0-0

Plate Offsets (X,Y)-- [1:Edge,0-2-0], [3:0-3-10,0-2-0], [5:0-4-0,0-1-13], [10:0-3-9,0-2-8], [12:0-3-12,0-3-0], [13:0-3-9,0-2-0]

LOADING (psf)		SPACING-	2-0-0	CSI.		DEFL.	in	(loc)	l/defl	L/d	PLATES	GRIP
TCLL	30.0	Plate Grip DOL	1.15	TC	0.71	Vert(LL)	-0.12	11-12	>999	240	MT20	220/195
(Roof Snow=30.0)		Lumber DOL	1.15	BC	0.47	Vert(CT)	-0.33	11-12	>946	180		
TCDL	14.0	Rep Stress Incr	YES	WB	0.39	Horz(CT)	0.08	9	n/a	n/a		
BCLL	0.0 *	Code	IBC2015/TPI2014	Matrix-MSH		Wind(LL)	0.13	11-12	>999	360	Weight: 145 lb	FT = 20%
BCDL	10.0											

LUMBER-

TOP CHORD 2x4 DF No.1&Btr G
BOT CHORD 2x4 DF No.1&Btr G
WEBS 2x4 DF Std G *Except*
1-13,7-10: 2x4 DF No.1&Btr G

BRACING-

TOP CHORD Structural wood sheathing directly applied or 2-9-5 oc purlins, except end verticals, and 2-0-0 oc purlins (4-0-15 max.): 3-5.
BOT CHORD Rigid ceiling directly applied or 6-0-0 oc bracing.

REACTIONS. (lb/size) 14=1554/0-5-8, 9=1816/0-5-8
Max Horz 14=-60(LC 15)
Max Uplift 14=-229(LC 11), 9=-261(LC 11)
Max Grav 14=2009(LC 32), 9=2389(LC 32)

FORCES. (lb) - Max. Comp./Max. Ten. - All forces 250 (lb) or less except when shown.
TOP CHORD 1-2=-3101/1001, 2-3=-2858/986, 3-4=-2509/932, 4-5=-2492/936, 5-6=-2851/981, 6-7=-2840/932, 7-8=-74/269, 1-14=-1946/593
BOT CHORD 12-13=-866/2761, 11-12=-819/2760, 10-11=-805/2549
WEBS 2-13=-453/48, 2-12=-363/100, 3-12=-319/610, 4-12=-554/95, 4-11=-582/103, 5-11=-298/523, 6-10=-661/105, 1-13=-835/2603, 7-10=-893/2825, 7-9=-2220/652

NOTES-

1) Wind: ASCE 7-10; Vult=110mph (3-second gust) Vasd=87mph; TCDL=7.2psf; BCDL=4.2psf; h=25ft; Cat. II; Exp C; Enclosed; MWFRS (envelope) and C-C Exterior(2) 0-1-12 to 3-1-12, Interior(1) 3-1-12 to 9-5-15, Exterior(2) 9-5-15 to 13-8-14, Interior(1) 13-8-14 to 17-0-1, Exterior(2) 17-0-1 to 21-2-15, Interior(1) 21-2-15 to 28-6-0 zone; cantilever left and right exposed ; porch left and right exposed;C-C for members and forces & MWFRS for reactions shown; Lumber DOL=1.33 plate grip DOL=1.33
2) TCLL: ASCE 7-10; Pf=30.0 psf (flat roof snow); Category II; Exp C; Partially Exp.; Ct=1.00
3) Unbalanced snow loads have been considered for this design.
4) Provide adequate drainage to prevent water ponding.
5) This truss has been designed for a 10.0 psf bottom chord live load nonconcurrent with any other live loads.
6) * This truss has been designed for a live load of 20.0psf on the bottom chord in all areas where a rectangle 3-6-0 tall by 2-0-0 wide will fit between the bottom chord and any other members.
7) A plate rating reduction of 20% has been applied for the green lumber members.
8) Provide mechanical connection (by others) of truss to bearing plate capable of withstanding 100 lb uplift at joint(s) except (jt=lb) 14=229, 9=261.
9) Graphical purlin representation does not depict the size or the orientation of the purlin along the top and/or bottom chord.
10) Hanger(s) or other connection device(s) shall be provided sufficient to support concentrated load(s) 176 lb down and 108 lb up at 9-11-10, 143 lb down and 81 lb up at 12-0-12, 153 lb down and 84 lb up at 13-3-0, and 143 lb down and 81 lb up at 14-5-4, and 176 lb down and 108 lb up at 16-6-6 on top chord. The design/selection of such connection device(s) is the responsibility of others.
11) This truss is designed for a creep factor of 3.01, which is used to calculate the Vert(CT) deflection per ANSI/TPI 1.

LOAD CASE(S) Standard

December 11,2019

Continued on page 2

WARNING - Verify design parameters and READ NOTES ON THIS AND INCLUDED MITEK REFERENCE PAGE MII-7473 rev. 10/03/2015 BEFORE USE.
Design valid for use only with MiTek® connectors. This design is based only upon parameters shown, and is for an individual building component, not a truss system. Before use, the building designer must verify the applicability of design parameters and properly incorporate this design into the overall building design. Bracing indicated is to prevent buckling of individual truss web and/or chord members only. Additional temporary and permanent bracing is always required for stability and to prevent collapse with possible personal injury and property damage. For general guidance regarding the fabrication, storage, delivery, erection and bracing of trusses and truss systems, see ***ANSI/TPI1 Quality Criteria, DSB-89 and BCSI Building Component Safety Information*** available from Truss Plate Institute, 218 N. Lee Street, Suite 312, Alexandria, VA 22314.

MiTek USA, Inc.
400 Sunrise Avenue, Suite 270
Roseville, CA 95661

LOAD CASE(S) Standard

1) Dead + Snow (balanced): Lumber Increase=1.15, Plate Increase=1.15
   Uniform Loads (plf)
   Vert: 1-3=-88, 3-5=-88, 5-8=-88, 14-15=-20
   Concentrated Loads (lb)
   Vert: 4=-69 20=-57 22=-63 25=-63 27=-57

WARNING - Verify design parameters and READ NOTES ON THIS AND INCLUDED MITEK REFERENCE PAGE MII-7473 rev. 10/03/2015 BEFORE USE.
Design valid for use only with MiTek® connectors. This design is based only upon parameters shown, and is for an individual building component, not a truss system. Before use, the building designer must verify the applicability of design parameters and properly incorporate this design into the overall building design. Bracing indicated is to prevent buckling of individual truss web and/or chord members only. Additional temporary and permanent bracing is always required for stability and to prevent collapse with possible personal injury and property damage. For general guidance regarding the fabrication, storage, delivery, erection and bracing of trusses and truss systems, see ***ANSI/TPI1 Quality Criteria, DSB-89 and BCSI Building Component Safety Information*** available from Truss Plate Institute, 218 N. Lee Street, Suite 312, Alexandria, VA 22314.

MiTek USA, Inc.
400 Sunrise Avenue, Suite 270
Roseville, CA 95661

Job	Truss	Truss Type	Qty	Ply	ESPINOZA R60548665
J19-319	H05	California	1	1	Job Reference (optional)

Stockton Truss, STOCKTON, CA 95215 8.330 s Dec 5 2019 MiTek Industries, Inc. Tue Dec 10 11:44:11 2019 Page 1
ID:eURouH3h5RzkGDllLuCRE8yWpf_-rB?cPm_K2CObGVzD8h3zewclT8Wnl6wKXwBJDmyANaI

4-5-15	9-0-7	9-5-7	14-9-8	20-1-9	20-6-9	25-1-1	30-0-8
4-5-15	4-6-8	0-5-0	5-4-1	5-4-1	0-5-0	4-6-8	4-11-7

Scale = 1:51.7

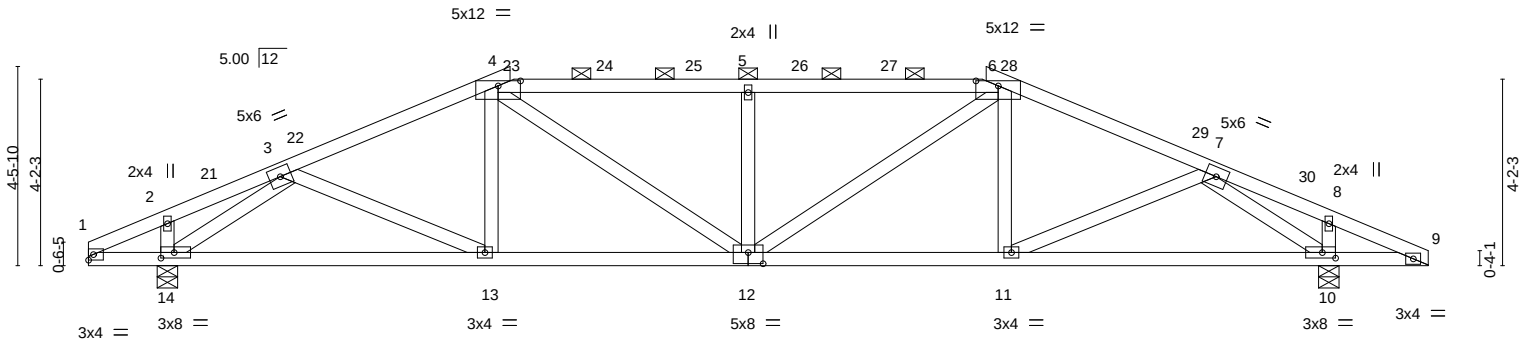

1-6-8	1-9-4	9-0-7	14-9-8	20-6-9	27-9-12	28-0-8	30-0-8
1-6-8	0-2-12	7-3-3	5-9-1	5-9-1	7-3-3	0-2-12	2-0-0

Plate Offsets (X,Y)-- [4:0-6-0,0-1-6], [6:0-6-0,0-1-6], [10:0-3-9,0-1-8], [12:0-4-0,0-3-0], [14:0-3-9,0-1-8]

LOADING (psf)		SPACING-	2-0-0	CSI.		DEFL.	in	(loc)	l/defl	L/d	PLATES	GRIP
TCLL	30.0	Plate Grip DOL	1.15	TC	0.68	Vert(LL)	-0.13	12	>999	240	MT20	220/195
(Roof Snow=30.0)		Lumber DOL	1.15	BC	0.40	Vert(CT)	-0.28	11-12	>999	180		
TCDL	14.0	Rep Stress Incr	YES	WB	0.60	Horz(CT)	0.10	10	n/a	n/a		
BCLL	0.0 *	Code	IBC2015/TPI2014	Matrix-MSH		Wind(LL)	0.08	13-14	>999	360	Weight: 143 lb	FT = 20%
BCDL	10.0											

LUMBER-
TOP CHORD 2x4 DF No.1&Btr G
BOT CHORD 2x4 DF No.1&Btr G
WEBS 2x4 DF Std G

BRACING-
TOP CHORD Structural wood sheathing directly applied or 3-5-4 oc purlins, except 2-0-0 oc purlins (3-1-2 max.): 4-6.
BOT CHORD Rigid ceiling directly applied or 6-0-0 oc bracing.

REACTIONS. (lb/size) 14=1702/0-5-8, 10=1759/0-5-8
Max Horz 14=-40(LC 15)
Max Uplift 14=-265(LC 10), 10=-272(LC 11)
Max Grav 14=2145(LC 32), 10=2229(LC 32)

FORCES. (lb) - Max. Comp./Max. Ten. - All forces 250 (lb) or less except when shown.
TOP CHORD 3-4=-2725/1012, 4-5=-2985/1148, 5-6=-2985/1148, 6-7=-2707/1008, 7-8=-38/297, 8-9=-39/271
BOT CHORD 13-14=-676/2086, 12-13=-837/2433, 11-12=-830/2417, 10-11=-657/2031
WEBS 3-13=-215/666, 4-12=-249/871, 5-12=-895/120, 6-12=-256/879, 7-11=-232/683, 3-14=-2702/791, 2-14=-307/61, 7-10=-2804/820, 8-10=-320/61

NOTES-
1) Wind: ASCE 7-10; Vult=110mph (3-second gust) Vasd=87mph; TCDL=7.2psf; BCDL=4.2psf; h=25ft; Cat. II; Exp C; Enclosed; MWFRS (envelope) and C-C Exterior(2) 0-0-0 to 3-0-0, Interior(1) 3-0-0 to 9-2-4, Exterior(2) 9-2-4 to 13-5-2, Interior(1) 13-5-2 to 20-4-12, Exterior(2) 20-4-12 to 24-7-11, Interior(1) 24-7-11 to 30-0-8 zone; cantilever left and right exposed ; porch left and right exposed;C-C for members and forces & MWFRS for reactions shown; Lumber DOL=1.33 plate grip DOL=1.33
2) TCLL: ASCE 7-10; Pf=30.0 psf (flat roof snow); Category II; Exp C; Partially Exp.; Ct=1.00
3) Unbalanced snow loads have been considered for this design.
4) Provide adequate drainage to prevent water ponding.
5) This truss has been designed for a 10.0 psf bottom chord live load nonconcurrent with any other live loads.
6) * This truss has been designed for a live load of 20.0psf on the bottom chord in all areas where a rectangle 3-6-0 tall by 2-0-0 wide will fit between the bottom chord and any other members.
7) A plate rating reduction of 20% has been applied for the green lumber members.
8) Provide mechanical connection (by others) of truss to bearing plate capable of withstanding 100 lb uplift at joint(s) except (jt=lb) 14=265, 10=272.
9) Graphical purlin representation does not depict the size or the orientation of the purlin along the top and/or bottom chord.
10) Hanger(s) or other connection device(s) shall be provided sufficient to support concentrated load(s) 213 lb down and 119 lb up at 9-6-2, 84 lb down and 54 lb up at 11-7-4, 95 lb down and 57 lb up at 13-7-4, 84 lb down and 57 lb up at 14-9-8, 95 lb down and 57 lb up at 15-11-12, and 84 lb down and 54 lb up at 17-11-12, and 213 lb down and 119 lb up at 20-0-14 on top chord. The design/selection of such connection device(s) is the responsibility of others.
11) This truss is designed for a creep factor of 3.01, which is used to calculate the Vert(CT) deflection per ANSI/TPI 1.

LOAD CASE(S) Standard

December 11,2019

Continued on page 2

WARNING - Verify design parameters and READ NOTES ON THIS AND INCLUDED MITEK REFERENCE PAGE MII-7473 rev. 10/03/2015 BEFORE USE.
Design valid for use only with MiTek® connectors. This design is based only upon parameters shown, and is for an individual building component, not a truss system. Before use, the building designer must verify the applicability of design parameters and properly incorporate this design into the overall building design. Bracing indicated is to prevent buckling of individual truss web and/or chord members only. Additional temporary and permanent bracing is always required for stability and to prevent collapse with possible personal injury and property damage. For general guidance regarding the fabrication, storage, delivery, erection and bracing of trusses and truss systems, see ***ANSI/TPI1 Quality Criteria, DSB-89 and BCSI Building Component Safety Information*** available from Truss Plate Institute, 218 N. Lee Street, Suite 312, Alexandria, VA 22314.

MiTek USA, Inc.
400 Sunrise Avenue, Suite 270
Roseville, CA 95661

LOAD CASE(S) Standard

1) Dead + Snow (balanced): Lumber Increase=1.15, Plate Increase=1.15
   Uniform Loads (plf)
   Vert: 1-4=-88, 4-6=-88, 6-9=-88, 15-18=-20
   Concentrated Loads (lb)
   Vert: 5=-0 23=-94 24=-3 25=-11 26=-11 27=-3 28=-94

WARNING - Verify design parameters and READ NOTES ON THIS AND INCLUDED MITEK REFERENCE PAGE MII-7473 rev. 10/03/2015 BEFORE USE.
Design valid for use only with MiTek® connectors. This design is based only upon parameters shown, and is for an individual building component, not a truss system. Before use, the building designer must verify the applicability of design parameters and properly incorporate this design into the overall building design. Bracing indicated is to prevent buckling of individual truss web and/or chord members only. Additional temporary and permanent bracing is always required for stability and to prevent collapse with possible personal injury and property damage. For general guidance regarding the fabrication, storage, delivery, erection and bracing of trusses and truss systems, see ***ANSI/TPI1 Quality Criteria, DSB-89 and BCSI Building Component Safety Information*** available from Truss Plate Institute, 218 N. Lee Street, Suite 312, Alexandria, VA 22314.

MiTek USA, Inc.
400 Sunrise Avenue, Suite 270
Roseville, CA 95661

Job	Truss	Truss Type	Qty	Ply	ESPINOZA
J19-319	H06	California Girder	1	2	R60548666

Job Reference (optional)

Stockton Truss, STOCKTON, CA 95215 8.330 s Dec 5 2019 MiTek Industries, Inc. Tue Dec 10 11:44:14 2019 Page 1

ID:eURouH3h5RzkGDllLuCRE8yWpf_-Fmgl1o0CL7mA7zhnqpdgGZEFWMV1yOXmDuQzp5yANaF

4-1-14	7-5-15	7-10-15	12-6-15	17-11-1	22-7-1	23-0-1	26-4-2	30-6-0
4-1-14	3-4-1	0-5-0	4-8-0	5-4-3	4-8-0	0-5-0	3-4-1	4-1-14

Scale = 1:51.5

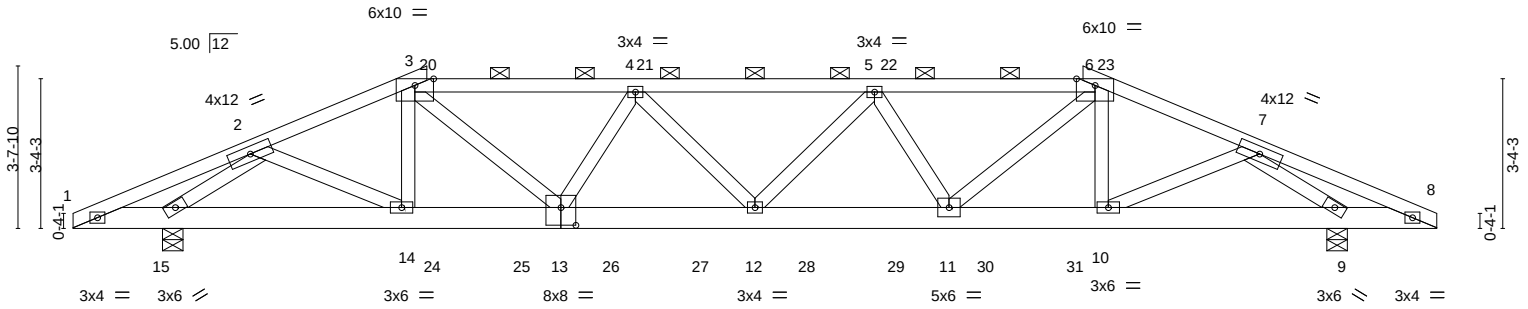

2-0-0	7-5-15	10-10-15	15-3-0	19-7-1	23-0-1	28-6-0	30-6-0
2-0-0	5-5-15	3-5-0	4-4-1	4-4-1	3-5-0	5-5-15	2-0-0

Plate Offsets (X,Y)-- [13:0-4-0,0-4-12]

LOADING (psf)		SPACING-	2-0-0	CSI.		DEFL.	in	(loc)	l/defl	L/d	PLATES	GRIP
TCLL	30.0	Plate Grip DOL	1.15	TC	0.69	Vert(LL)	-0.24	12	>999	240	MT20	220/195
(Roof Snow=30.0)		Lumber DOL	1.15	BC	0.56	Vert(CT)	-0.49	12	>654	180		
TCDL	14.0	Rep Stress Incr	NO	WB	0.86	Horz(CT)	0.10	9	n/a	n/a		
BCLL	0.0 *	Code	IBC2015/TPI2014	Matrix-MSH		Wind(LL)	0.12	12	>999	360	Weight: 332 lb	FT = 20%
BCDL	10.0											

LUMBER-

TOP CHORD 2x4 DF No.1&Btr G
BOT CHORD 2x6 DF SS G
WEBS 2x4 DF Std G

BRACING-

TOP CHORD Structural wood sheathing directly applied or 5-2-10 oc purlins, except
2-0-0 oc purlins (3-9-3 max.): 3-6.
BOT CHORD Rigid ceiling directly applied or 10-0-0 oc bracing.

REACTIONS. (lb/size) 15=3907/0-5-8, 9=3907/0-5-8
Max Horz 15=-29(LC 15)
Max Uplift 15=-691(LC 7), 9=-691(LC 6)
Max Grav 15=3985(LC 28), 9=3985(LC 28)

FORCES. (lb) - Max. Comp./Max. Ten. - All forces 250 (lb) or less except when shown.

TOP CHORD 1-2=-497/244, 2-3=-7324/1316, 3-4=-9783/1725, 4-5=-11314/2000, 5-6=-9783/1725, 6-7=-7324/1316, 7-8=-497/244
BOT CHORD 1-15=-155/409, 14-15=-822/4746, 13-14=-1188/6892, 12-13=-1796/10632, 11-12=-1796/10632, 10-11=-1187/6892, 9-10=-821/4746, 8-9=-155/409
WEBS 2-14=-401/2342, 3-14=-696/120, 3-13=-649/3904, 4-13=-1734/263, 4-12=-219/1041, 5-12=-219/1041, 5-11=-1734/263, 6-11=-649/3904, 6-10=-696/120, 7-10=-401/2342, 2-15=-5527/940, 7-9=-5527/940

NOTES-

1) 2-ply truss to be connected together with 10d (0.131"x3") nails as follows:
Top chords connected as follows: 2x4 - 1 row at 0-7-0 oc.
Bottom chords connected as follows: 2x6 - 2 rows staggered at 0-9-0 oc.
Webs connected as follows: 2x4 - 1 row at 0-9-0 oc.
2) All loads are considered equally applied to all plies, except if noted as front (F) or back (B) face in the LOAD CASE(S) section. Ply to ply connections have been provided to distribute only loads noted as (F) or (B), unless otherwise indicated.
3) Wind: ASCE 7-10; Vult=110mph (3-second gust) Vasd=87mph; TCDL=7.2psf; BCDL=4.2psf; h=25ft; Cat. II; Exp C; Enclosed; MWFRS (envelope); cantilever left and right exposed ; porch left and right exposed; Lumber DOL=1.33 plate grip DOL=1.33
4) TCLL: ASCE 7-10; Pf=30.0 psf (flat roof snow); Category II; Exp C; Partially Exp.; Ct=1.00
5) Unbalanced snow loads have been considered for this design.
6) Provide adequate drainage to prevent water ponding.
7) This truss has been designed for a 10.0 psf bottom chord live load nonconcurrent with any other live loads.
8) * This truss has been designed for a live load of 20.0psf on the bottom chord in all areas where a rectangle 3-6-0 tall by 2-0-0 wide will fit between the bottom chord and any other members.
9) A plate rating reduction of 20% has been applied for the green lumber members.
10) Provide mechanical connection (by others) of truss to bearing plate capable of withstanding 100 lb uplift at joint(s) except (jt=lb) 15=691, 9=691.
11) Graphical purlin representation does not depict the size or the orientation of the purlin along the top and/or bottom chord.

December 11,2019

Continued on page 2

WARNING - Verify design parameters and READ NOTES ON THIS AND INCLUDED MITEK REFERENCE PAGE MII-7473 rev. 10/03/2015 BEFORE USE.
Design valid for use only with MiTek® connectors. This design is based only upon parameters shown, and is for an individual building component, not a truss system. Before use, the building designer must verify the applicability of design parameters and properly incorporate this design into the overall building design. Bracing indicated is to prevent buckling of individual truss web and/or chord members only. Additional temporary and permanent bracing is always required for stability and to prevent collapse with possible personal injury and property damage. For general guidance regarding the fabrication, storage, delivery, erection and bracing of trusses and truss systems, see ***ANSI/TPI1 Quality Criteria, DSB-89 and BCSI Building Component Safety Information*** available from Truss Plate Institute, 218 N. Lee Street, Suite 312, Alexandria, VA 22314.

MiTek USA, Inc.
400 Sunrise Avenue, Suite 270
Roseville, CA 95661

NOTES-

12) Hanger(s) or other connection device(s) shall be provided sufficient to support concentrated load(s) 364 lb down and 161 lb up at 7-11-10, and 364 lb down and 161 lb up at 22-6-6 on top chord, and 310 lb down and 53 lb up at 8-0-12, 537 lb down and 96 lb up at 10-0-12, 509 lb down and 100 lb up at 12-0-12, 471 lb down and 104 lb up at 14-0-12, 456 lb down and 106 lb up at 15-3-0, 471 lb down and 104 lb up at 16-5-4, 509 lb down and 100 lb up at 18-5-4, and 537 lb down and 96 lb up at 20-5-4, and 310 lb down and 53 lb up at 22-5-4 on bottom chord. The design/selection of such connection device(s) is the responsibility of others.
13) This truss is designed for a creep factor of 3.01, which is used to calculate the Vert(CT) deflection per ANSI/TPI 1.

LOAD CASE(S) Standard

1) Dead + Snow (balanced): Lumber Increase=1.15, Plate Increase=1.15
   Uniform Loads (plf)
   Vert: 1-3=-88, 3-6=-88, 6-8=-88, 9-15=-20
   Concentrated Loads (lb)
   Vert: 12=-456(F) 20=-245 23=-245 24=-310(F) 25=-537(F) 26=-509(F) 27=-471(F) 28=-471(F) 29=-509(F) 30=-537(F) 31=-310(F)

WARNING - Verify design parameters and READ NOTES ON THIS AND INCLUDED MITEK REFERENCE PAGE MII-7473 rev. 10/03/2015 BEFORE USE.

Design valid for use only with MiTek® connectors. This design is based only upon parameters shown, and is for an individual building component, not a truss system. Before use, the building designer must verify the applicability of design parameters and properly incorporate this design into the overall building design. Bracing indicated is to prevent buckling of individual truss web and/or chord members only. Additional temporary and permanent bracing is always required for stability and to prevent collapse with possible personal injury and property damage. For general guidance regarding the fabrication, storage, delivery, erection and bracing of trusses and truss systems, see ***ANSI/TPI1 Quality Criteria, DSB-89 and BCSI Building Component Safety Information*** available from Truss Plate Institute, 218 N. Lee Street, Suite 312, Alexandria, VA 22314.

MiTek USA, Inc.
400 Sunrise Avenue, Suite 270
Roseville, CA 95661

Job	Truss	Truss Type	Qty	Ply	ESPINOZA
J19-319	J01	Jack-Open	14	1	R60548672

Job Reference (optional)

Stockton Truss, STOCKTON, CA 95215 8.330 s Dec 5 2019 MiTek Industries, Inc. Tue Dec 10 11:44:18 2019 Page 1

ID:eURouH3h5RzkGDllLuCRE8yWpf_-8YwGt93jOLGcca?Z3fhcQPO5jz?1uP_M8WOBysyANaB

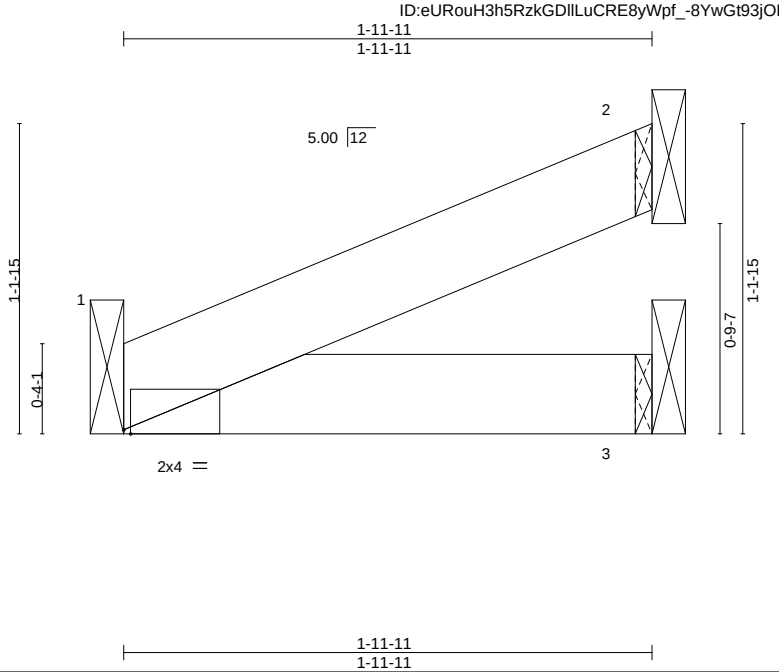

Plate Offsets (X,Y)-- [1:0-0-5,Edge]

LOADING (psf)		SPACING-	2-0-0	CSI.		DEFL.	in	(loc)	l/defl	L/d	PLATES	GRIP
TCLL	30.0	Plate Grip DOL	1.15	TC	0.03	Vert(LL)	-0.00	6	>999	240	MT20	220/195
(Roof Snow=30.0)		Lumber DOL	1.15	BC	0.04	Vert(CT)	-0.00	6	>999	180		
TCDL	14.0	Rep Stress Incr	YES	WB	0.00	Horz(CT)	-0.00	1	n/a	n/a		
BCLL	0.0 *	Code IBC2015/TPI2014		Matrix-MP		Wind(LL)	0.00	6	>999	360	Weight: 6 lb	FT = 20%
BCDL	10.0											

LUMBER-
TOP CHORD 2x4 DF No.1&Btr G
BOT CHORD 2x4 DF No.1&Btr G

BRACING-
TOP CHORD Structural wood sheathing directly applied or 1-11-11 oc purlins.
BOT CHORD Rigid ceiling directly applied or 10-0-0 oc bracing.

REACTIONS. (lb/size) 1=106/Mechanical, 2=69/Mechanical, 3=37/Mechanical
Max Horz 2=21(LC 14)
Max Uplift 1=-17(LC 11), 2=-2(LC 11), 3=-9(LC 11)
Max Grav 1=106(LC 1), 2=69(LC 1), 3=37(LC 5)

FORCES. (lb) - Max. Comp./Max. Ten. - All forces 250 (lb) or less except when shown.

NOTES-
1) Wind: ASCE 7-10; Vult=110mph (3-second gust) Vasd=87mph; TCDL=7.2psf; BCDL=4.2psf; h=25ft; Cat. II; Exp C; Enclosed; MWFRS (envelope) and C-C Exterior(2) zone; cantilever left and right exposed ; porch left and right exposed;C-C for members and forces & MWFRS for reactions shown; Lumber DOL=1.33 plate grip DOL=1.33
2) TCLL: ASCE 7-10; Pf=30.0 psf (flat roof snow); Category II; Exp C; Partially Exp.; Ct=1.00
3) Unbalanced snow loads have been considered for this design.
4) This truss has been designed for a 10.0 psf bottom chord live load nonconcurrent with any other live loads.
5) * This truss has been designed for a live load of 20.0psf on the bottom chord in all areas where a rectangle 3-6-0 tall by 2-0-0 wide will fit between the bottom chord and any other members.
6) A plate rating reduction of 20% has been applied for the green lumber members.
7) Refer to girder(s) for truss to truss connections.
8) Provide mechanical connection (by others) of truss to bearing plate capable of withstanding 100 lb uplift at joint(s) 1, 2, 3.
9) This truss is designed for a creep factor of 3.01, which is used to calculate the Vert(CT) deflection per ANSI/TPI 1.

December 11,2019

WARNING - Verify design parameters and READ NOTES ON THIS AND INCLUDED MITEK REFERENCE PAGE MII-7473 rev. 10/03/2015 BEFORE USE.
Design valid for use only with MiTek® connectors. This design is based only upon parameters shown, and is for an individual building component, not a truss system. Before use, the building designer must verify the applicability of design parameters and properly incorporate this design into the overall building design. Bracing indicated is to prevent buckling of individual truss web and/or chord members only. Additional temporary and permanent bracing is always required for stability and to prevent collapse with possible personal injury and property damage. For general guidance regarding the fabrication, storage, delivery, erection and bracing of trusses and truss systems, see ***ANSI/TPI1 Quality Criteria, DSB-89 and BCSI Building Component Safety Information*** available from Truss Plate Institute, 218 N. Lee Street, Suite 312, Alexandria, VA 22314.

MiTek USA, Inc.
400 Sunrise Avenue, Suite 270
Roseville, CA 95661

Job	Truss	Truss Type	Qty	Ply	ESPINOZA R60548673
J19-319	J02	Jack-Open	10	1	Job Reference (optional)

Stockton Truss, STOCKTON, CA 95215 8.330 s Dec 5 2019 MiTek Industries, Inc. Tue Dec 10 11:44:19 2019 Page 1

ID:eURouH3h5RzkGDllLuCRE8yWpf_-ckUe4V4L9fOTDkalcNCrzcxFbNL0drdVNA7kVlyANaA

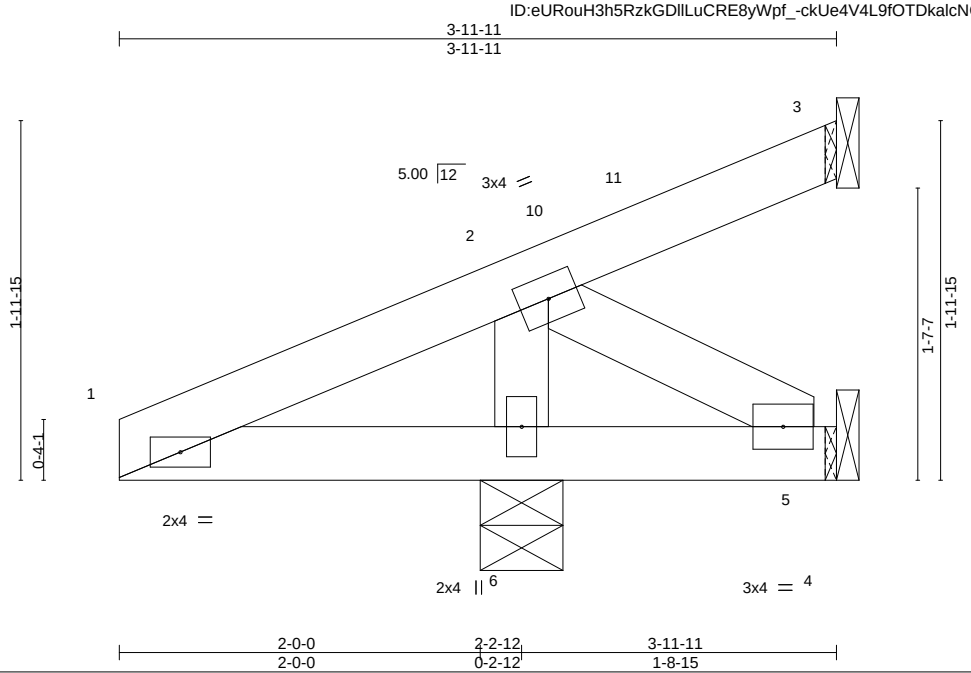

LOADING (psf)		SPACING-	2-0-0	CSI.		DEFL.	in	(loc)	l/defl	L/d	PLATES	GRIP
TCLL	30.0	Plate Grip DOL	1.15	TC	0.09	Vert(LL)	0.00	6	>999	240	MT20	220/195
(Roof Snow=30.0)		Lumber DOL	1.15	BC	0.06	Vert(CT)	0.00	6	>999	180		
TCDL	14.0	Rep Stress Incr	YES	WB	0.10	Horz(CT)	-0.00	3	n/a	n/a		
BCLL	0.0 *	Code	IBC2015/TPI2014	Matrix-MP		Wind(LL)	-0.00	6	>999	360	Weight: 15 lb	FT = 20%
BCDL	10.0											

LUMBER-

TOP CHORD 2x4 DF No.1&Btr G
BOT CHORD 2x4 DF No.1&Btr G
WEBS 2x4 DF Std G

BRACING-

TOP CHORD Structural wood sheathing directly applied or 3-11-11 oc purlins.
BOT CHORD Rigid ceiling directly applied or 6-0-0 oc bracing.

REACTIONS. (lb/size) 3=48/Mechanical, 6=496/0-5-8, 5=-120/Mechanical
Max Horz 6=42(LC 14)
Max Uplift 3=-11(LC 14), 6=-48(LC 10), 5=-120(LC 1)
Max Grav 3=54(LC 20), 6=500(LC 20)

FORCES. (lb) - Max. Comp./Max. Ten. - All forces 250 (lb) or less except when shown.
TOP CHORD 1-2=-174/257
WEBS 2-6=-410/219

NOTES-

1) Wind: ASCE 7-10; Vult=110mph (3-second gust) Vasd=87mph; TCDL=7.2psf; BCDL=4.2psf; h=25ft; Cat. II; Exp C; Enclosed; MWFRS (envelope) and C-C Exterior(2) 0-0-0 to 3-0-0, Interior(1) 3-0-0 to 3-10-15 zone; cantilever left and right exposed ; porch left and right exposed;C-C for members and forces & MWFRS for reactions shown; Lumber DOL=1.33 plate grip DOL=1.33
2) TCLL: ASCE 7-10; Pf=30.0 psf (flat roof snow); Category II; Exp C; Partially Exp.; Ct=1.00
3) Unbalanced snow loads have been considered for this design.
4) This truss has been designed for a 10.0 psf bottom chord live load nonconcurrent with any other live loads.
5) * This truss has been designed for a live load of 20.0psf on the bottom chord in all areas where a rectangle 3-6-0 tall by 2-0-0 wide will fit between the bottom chord and any other members.
6) A plate rating reduction of 20% has been applied for the green lumber members.
7) Refer to girder(s) for truss to truss connections.
8) Provide mechanical connection (by others) of truss to bearing plate capable of withstanding 100 lb uplift at joint(s) 3, 6 except (jt=lb) 5=120.
9) This truss is designed for a creep factor of 3.01, which is used to calculate the Vert(CT) deflection per ANSI/TPI 1.

December 11,2019

WARNING - Verify design parameters and READ NOTES ON THIS AND INCLUDED MITEK REFERENCE PAGE MII-7473 rev. 10/03/2015 BEFORE USE.

Design valid for use only with MiTek® connectors. This design is based only upon parameters shown, and is for an individual building component, not a truss system. Before use, the building designer must verify the applicability of design parameters and properly incorporate this design into the overall building design. Bracing indicated is to prevent buckling of individual truss web and/or chord members only. Additional temporary and permanent bracing is always required for stability and to prevent collapse with possible personal injury and property damage. For general guidance regarding the fabrication, storage, delivery, erection and bracing of trusses and truss systems, see ***ANSI/TPI1 Quality Criteria, DSB-89 and BCSI Building Component Safety Information*** available from Truss Plate Institute, 218 N. Lee Street, Suite 312, Alexandria, VA 22314.

MiTek USA, Inc.
400 Sunrise Avenue, Suite 270
Roseville, CA 95661

Job	Truss	Truss Type	Qty	Ply	ESPINOZA R60548674
J19-319	J03	Jack-Open	11	1	Job Reference (optional)

Stockton Truss, STOCKTON, CA 95215 8.330 s Dec 5 2019 MiTek Industries, Inc. Tue Dec 10 11:44:20 2019 Page 1
ID:eURouH3h5RzkGDllLuCRE8yWpf_-4w10Ir5zwzWKru9xA4k4WqTPnmfrMJYfcqtH1kyANa9

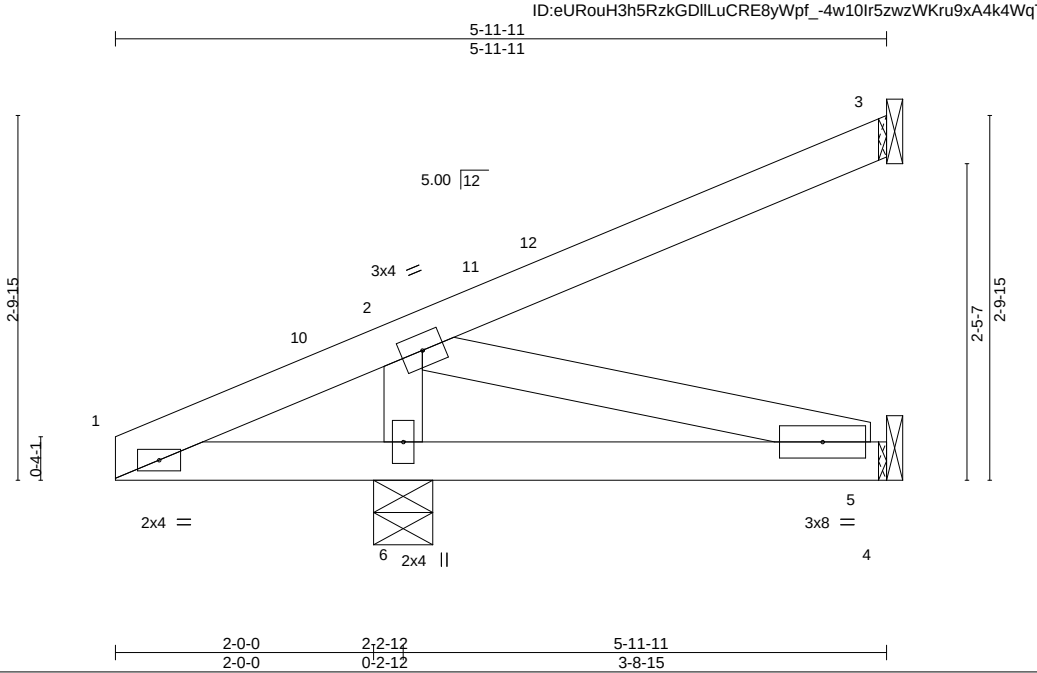

LOADING (psf)		SPACING-	2-0-0	CSI.		DEFL.	in	(loc)	l/defl	L/d	PLATES	GRIP
TCLL	30.0	Plate Grip DOL	1.15	TC	0.19	Vert(LL)	-0.00	5-6	>999	240	MT20	220/195
(Roof Snow=30.0)		Lumber DOL	1.15	BC	0.08	Vert(CT)	-0.01	5-6	>999	180		
TCDL	14.0	Rep Stress Incr	YES	WB	0.06	Horz(CT)	-0.00	3	n/a	n/a		
BCLL	0.0 *	Code	IBC2015/TPI2014	Matrix-MP		Wind(LL)	0.01	5-6	>999	360	Weight: 23 lb	FT = 20%
BCDL	10.0											

LUMBER-
TOP CHORD 2x4 DF No.1&Btr G
BOT CHORD 2x4 DF No.1&Btr G
WEBS 2x4 DF Std G

BRACING-
TOP CHORD Structural wood sheathing directly applied or 5-11-11 oc purlins.
BOT CHORD Rigid ceiling directly applied or 6-0-0 oc bracing.

REACTIONS. (lb/size) 3=130/Mechanical, 5=-2/Mechanical, 6=513/0-5-8
Max Horz 6=64(LC 14)
Max Uplift 3=-24(LC 14), 5=-31(LC 11), 6=-50(LC 10)
Max Grav 3=151(LC 20), 5=42(LC 5), 6=525(LC 20)

FORCES. (lb) - Max. Comp./Max. Ten. - All forces 250 (lb) or less except when shown.
WEBS 2-6=-450/160

NOTES-
1) Wind: ASCE 7-10; Vult=110mph (3-second gust) Vasd=87mph; TCDL=7.2psf; BCDL=4.2psf; h=25ft; Cat. II; Exp C; Enclosed; MWFRS (envelope) and C-C Exterior(2) 0-0-0 to 3-0-0, Interior(1) 3-0-0 to 5-10-15 zone; cantilever left and right exposed ; porch left and right exposed;C-C for members and forces & MWFRS for reactions shown; Lumber DOL=1.33 plate grip DOL=1.33
2) TCLL: ASCE 7-10; Pf=30.0 psf (flat roof snow); Category II; Exp C; Partially Exp.; Ct=1.00
3) Unbalanced snow loads have been considered for this design.
4) This truss has been designed for a 10.0 psf bottom chord live load nonconcurrent with any other live loads.
5) * This truss has been designed for a live load of 20.0psf on the bottom chord in all areas where a rectangle 3-6-0 tall by 2-0-0 wide will fit between the bottom chord and any other members.
6) A plate rating reduction of 20% has been applied for the green lumber members.
7) Refer to girder(s) for truss to truss connections.
8) Provide mechanical connection (by others) of truss to bearing plate capable of withstanding 100 lb uplift at joint(s) 3, 5, 6.
9) This truss is designed for a creep factor of 3.01, which is used to calculate the Vert(CT) deflection per ANSI/TPI 1.

December 11,2019

WARNING - Verify design parameters and READ NOTES ON THIS AND INCLUDED MITEK REFERENCE PAGE MII-7473 rev. 10/03/2015 BEFORE USE.
Design valid for use only with MiTek® connectors. This design is based only upon parameters shown, and is for an individual building component, not a truss system. Before use, the building designer must verify the applicability of design parameters and properly incorporate this design into the overall building design. Bracing indicated is to prevent buckling of individual truss web and/or chord members only. Additional temporary and permanent bracing is always required for stability and to prevent collapse with possible personal injury and property damage. For general guidance regarding the fabrication, storage, delivery, erection and bracing of trusses and truss systems, see ***ANSI/TPI1 Quality Criteria, DSB-89 and BCSI Building Component Safety Information*** available from Truss Plate Institute, 218 N. Lee Street, Suite 312, Alexandria, VA 22314.

MiTek USA, Inc.
400 Sunrise Avenue, Suite 270
Roseville, CA 95661

Job	Truss	Truss Type	Qty	Ply	ESPINOZA R60548675
J19-319	J04	Jack-Closed	3	1	Job Reference (optional)

Stockton Truss, STOCKTON, CA 95215 8.330 s Dec 5 2019 MiTek Industries, Inc. Tue Dec 10 11:44:21 2019 Page 1
ID:eURouH3h5RzkGDllLuCRE8yWpf_-Y7bOVB5bhGeBT2k8knFJ210W9A_?5lZoqUcrZByANa8

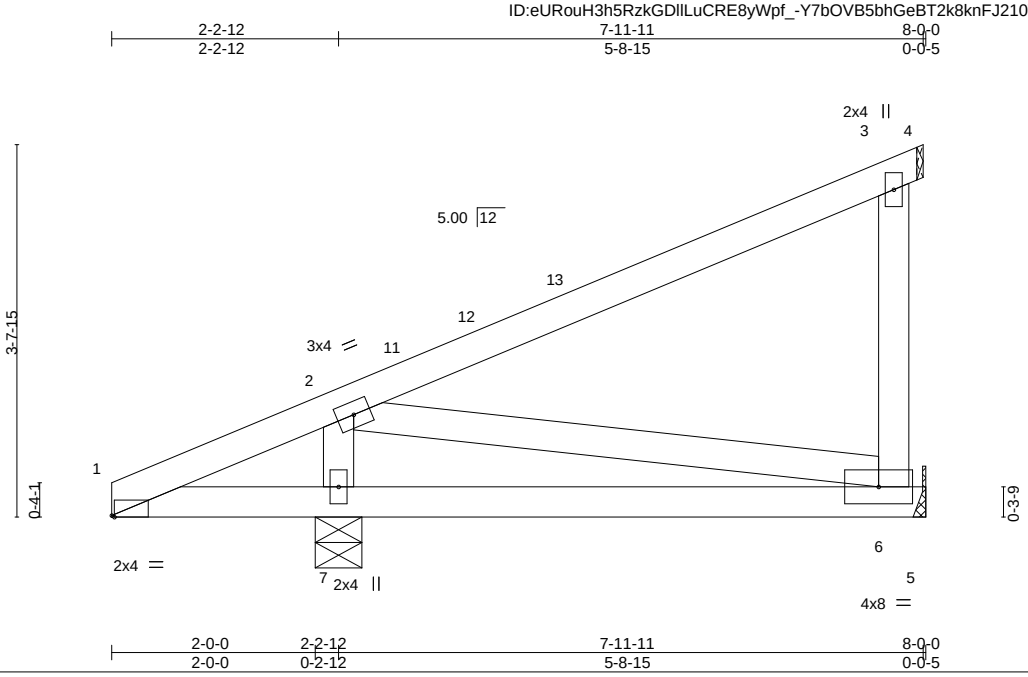

Plate Offsets (X,Y)-- [1:0-0-5,Edge]

LOADING (psf)		SPACING-	2-0-0	CSI.		DEFL.	in	(loc)	l/defl	L/d	PLATES	GRIP
TCLL	30.0	Plate Grip DOL	1.15	TC	0.41	Vert(LL)	-0.02	6-7	>999	240	MT20	220/195
(Roof Snow=30.0)		Lumber DOL	1.15	BC	0.15	Vert(CT)	-0.07	6-7	>958	180		
TCDL	14.0	Rep Stress Incr	YES	WB	0.08	Horz(CT)	-0.00	6	n/a	n/a		
BCLL	0.0 *	Code	IBC2015/TPI2014	Matrix-MP		Wind(LL)	0.04	6-7	>999	360	Weight: 35 lb	FT = 20%
BCDL	10.0											

LUMBER-
TOP CHORD 2x4 DF No.1&Btr G
BOT CHORD 2x4 DF No.1&Btr G
WEBS 2x4 DF Std G

BRACING-
TOP CHORD Structural wood sheathing directly applied or 6-0-0 oc purlins, except end verticals.
BOT CHORD Rigid ceiling directly applied or 10-0-0 oc bracing.

REACTIONS. (lb/size) 6=278/Mechanical, 7=584/0-5-8
Max Horz 7=86(LC 14)
Max Uplift 6=-57(LC 11), 7=-56(LC 10)
Max Grav 6=330(LC 20), 7=601(LC 20)

FORCES. (lb) - Max. Comp./Max. Ten. - All forces 250 (lb) or less except when shown.
TOP CHORD 3-6=-266/112
WEBS 2-7=-538/104

NOTES-
1) Wind: ASCE 7-10; Vult=110mph (3-second gust) Vasd=87mph; TCDL=7.2psf; BCDL=4.2psf; h=25ft; Cat. II; Exp C; Enclosed; MWFRS (envelope) and C-C Exterior(2) 0-0-0 to 3-0-0, Interior(1) 3-0-0 to 7-11-11 zone; cantilever left and right exposed ; porch left and right exposed;C-C for members and forces & MWFRS for reactions shown; Lumber DOL=1.33 plate grip DOL=1.33
2) TCLL: ASCE 7-10; Pf=30.0 psf (flat roof snow); Category II; Exp C; Partially Exp.; Ct=1.00
3) Unbalanced snow loads have been considered for this design.
4) This truss has been designed for a 10.0 psf bottom chord live load nonconcurrent with any other live loads.
5) * This truss has been designed for a live load of 20.0psf on the bottom chord in all areas where a rectangle 3-6-0 tall by 2-0-0 wide will fit between the bottom chord and any other members.
6) A plate rating reduction of 20% has been applied for the green lumber members.
7) Refer to girder(s) for truss to truss connections.
8) Provide mechanical connection (by others) of truss to bearing plate capable of withstanding 100 lb uplift at joint(s) 6, 7.
9) This truss is designed for a creep factor of 3.01, which is used to calculate the Vert(CT) deflection per ANSI/TPI 1.

December 11,2019

WARNING - Verify design parameters and READ NOTES ON THIS AND INCLUDED MITEK REFERENCE PAGE MII-7473 rev. 10/03/2015 BEFORE USE.
Design valid for use only with MiTek® connectors. This design is based only upon parameters shown, and is for an individual building component, not a truss system. Before use, the building designer must verify the applicability of design parameters and properly incorporate this design into the overall building design. Bracing indicated is to prevent buckling of individual truss web and/or chord members only. Additional temporary and permanent bracing is always required for stability and to prevent collapse with possible personal injury and property damage. For general guidance regarding the fabrication, storage, delivery, erection and bracing of trusses and truss systems, see ***ANSI/TPI1 Quality Criteria, DSB-89 and BCSI Building Component Safety Information*** available from Truss Plate Institute, 218 N. Lee Street, Suite 312, Alexandria, VA 22314.

MiTek USA, Inc.
400 Sunrise Avenue, Suite 270
Roseville, CA 95661

Job	Truss	Truss Type	Qty	Ply	ESPINOZA R60548676
J19-319	J05	Jack-Closed	3	1	Job Reference (optional)

Stockton Truss, STOCKTON, CA 95215 8.330 s Dec 5 2019 MiTek Industries, Inc. Tue Dec 10 11:44:22 2019 Page 1
ID:eURouH3h5RzkGDllLuCRE8yWpf_-0J9niX6DSam24CJKIVmYbFZjbaK3qD5x38MO5dyANa7

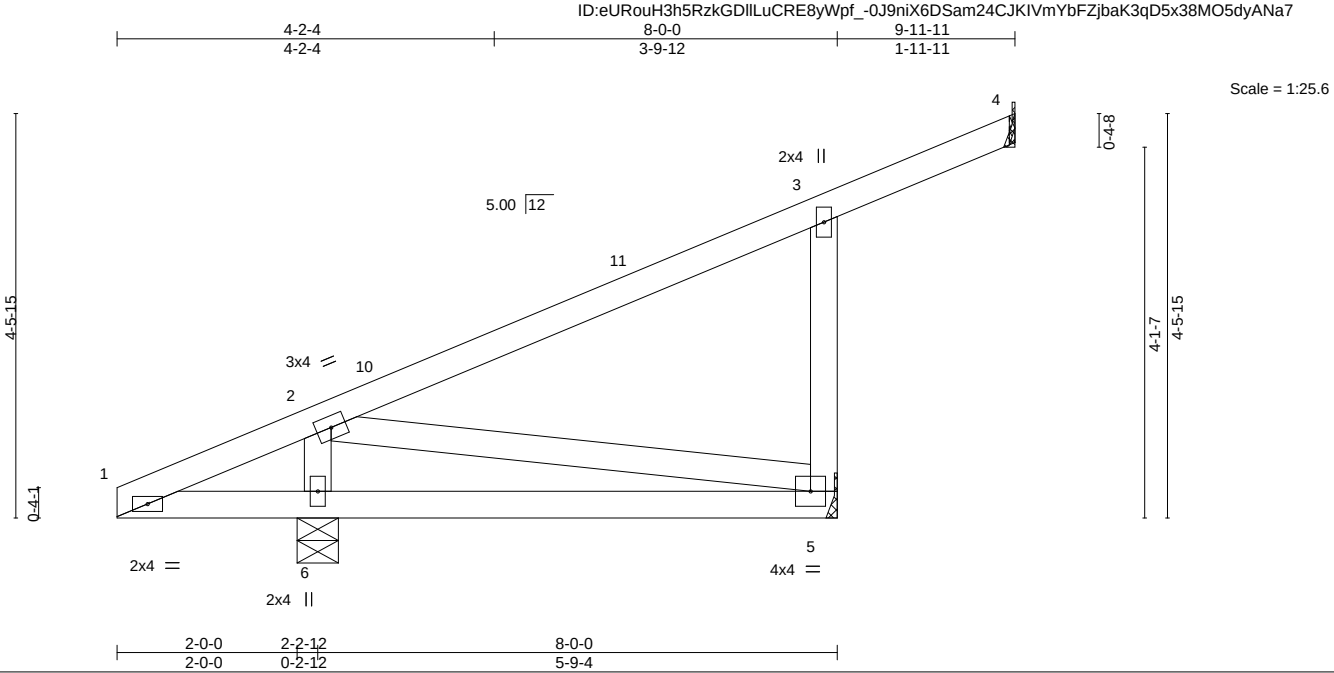

LOADING (psf)		SPACING-	2-0-0	CSI.		DEFL.	in	(loc)	l/defl	L/d	PLATES	GRIP
TCLL	30.0	Plate Grip DOL	1.15	TC	0.30	Vert(LL)	-0.02	5-6	>999	240	MT20	220/195
(Roof Snow=30.0)		Lumber DOL	1.15	BC	0.16	Vert(CT)	-0.08	5-6	>885	180		
TCDL	14.0	Rep Stress Incr	YES	WB	0.06	Horz(CT)	-0.00	4	n/a	n/a		
BCLL	0.0 *	Code	IBC2015/TPI2014	Matrix-MP		Wind(LL)	0.05	5-6	>999	360	Weight: 39 lb	FT = 20%
BCDL	10.0											

LUMBER-
TOP CHORD 2x4 DF No.1&Btr G
BOT CHORD 2x4 DF No.1&Btr G
WEBS 2x4 DF Std G

BRACING-
TOP CHORD Structural wood sheathing directly applied or 6-0-0 oc purlins, except end verticals.
BOT CHORD Rigid ceiling directly applied or 6-0-0 oc bracing.

REACTIONS. (lb/size) 4=-2/Mechanical, 5=473/Mechanical, 6=558/0-5-8
Max Horz 6=107(LC 14)
Max Uplift 4=-2(LC 1), 5=-85(LC 11), 6=-45(LC 10)
Max Grav 4=12(LC 21), 5=557(LC 21), 6=563(LC 21)

FORCES. (lb) - Max. Comp./Max. Ten. - All forces 250 (lb) or less except when shown.
TOP CHORD 3-5=-511/113
WEBS 2-6=-469/69

NOTES-
1) Wind: ASCE 7-10; Vult=110mph (3-second gust) Vasd=87mph; TCDL=7.2psf; BCDL=4.2psf; h=25ft; Cat. II; Exp C; Enclosed; MWFRS (envelope) and C-C Exterior(2) 0-0-0 to 3-0-0, Interior(1) 3-0-0 to 9-10-15 zone; cantilever left and right exposed ; porch left and right exposed;C-C for members and forces & MWFRS for reactions shown; Lumber DOL=1.33 plate grip DOL=1.33
2) TCLL: ASCE 7-10; Pf=30.0 psf (flat roof snow); Category II; Exp C; Partially Exp.; Ct=1.00
3) Unbalanced snow loads have been considered for this design.
4) This truss has been designed for a 10.0 psf bottom chord live load nonconcurrent with any other live loads.
5) * This truss has been designed for a live load of 20.0psf on the bottom chord in all areas where a rectangle 3-6-0 tall by 2-0-0 wide will fit between the bottom chord and any other members.
6) A plate rating reduction of 20% has been applied for the green lumber members.
7) Refer to girder(s) for truss to truss connections.
8) Provide mechanical connection (by others) of truss to bearing plate capable of withstanding 100 lb uplift at joint(s) 4, 5, 6.
9) This truss is designed for a creep factor of 3.01, which is used to calculate the Vert(CT) deflection per ANSI/TPI 1.

December 11,2019

WARNING - Verify design parameters and READ NOTES ON THIS AND INCLUDED MITEK REFERENCE PAGE MII-7473 rev. 10/03/2015 BEFORE USE.
Design valid for use only with MiTek® connectors. This design is based only upon parameters shown, and is for an individual building component, not a truss system. Before use, the building designer must verify the applicability of design parameters and properly incorporate this design into the overall building design. Bracing indicated is to prevent buckling of individual truss web and/or chord members only. Additional temporary and permanent bracing is always required for stability and to prevent collapse with possible personal injury and property damage. For general guidance regarding the fabrication, storage, delivery, erection and bracing of trusses and truss systems, see ***ANSI/TPI1 Quality Criteria, DSB-89 and BCSI Building Component Safety Information*** available from Truss Plate Institute, 218 N. Lee Street, Suite 312, Alexandria, VA 22314.

MiTek USA, Inc.
400 Sunrise Avenue, Suite 270
Roseville, CA 95661

Job	Truss	Truss Type	Qty	Ply	ESPINOZA R60548677
J19-319	J06	Jack-Closed	2	1	Job Reference (optional)

Stockton Truss, STOCKTON, CA 95215 8.330 s Dec 5 2019 MiTek Industries, Inc. Tue Dec 10 11:44:23 2019 Page 1
ID:eURouH3h5RzkGDllLuCRE8yWpf_-VVj9ws7rDuuviLtWrCHn7S5uf_gIZgG5Io5ye3yANa6

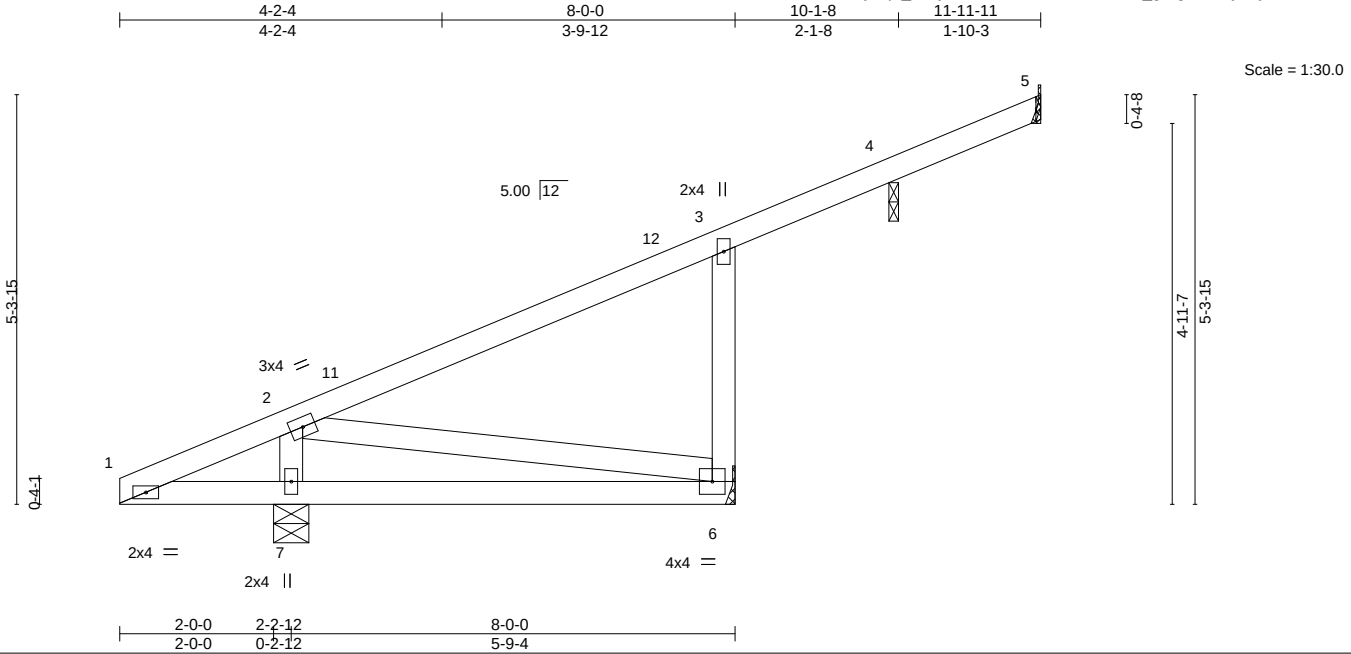

LOADING (psf)		SPACING-	2-0-0	CSI.		DEFL.	in	(loc)	l/defl	L/d	PLATES	GRIP
TCLL	30.0	Plate Grip DOL	1.15	TC	0.28	Vert(LL)	-0.02	6-7	>999	240	MT20	220/195
(Roof Snow=30.0)		Lumber DOL	1.15	BC	0.16	Vert(CT)	-0.08	6-7	>885	180		
TCDL	14.0	Rep Stress Incr	YES	WB	0.06	Horz(CT)	-0.00	5	n/a	n/a		
BCLL	0.0 *	Code	IBC2015/TPI2014	Matrix-MP		Wind(LL)	0.05	6-7	>999	360	Weight: 42 lb	FT = 20%
BCDL	10.0											

LUMBER-
TOP CHORD 2x4 DF No.1&Btr G
BOT CHORD 2x4 DF No.1&Btr G
WEBS 2x4 DF Std G

BRACING-
TOP CHORD Structural wood sheathing directly applied or 6-0-0 oc purlins, except end verticals.
BOT CHORD Rigid ceiling directly applied or 6-0-0 oc bracing.

REACTIONS. All bearings Mechanical except (jt=length) 7=0-5-8, 4=0-1-8.
(lb) - Max Horz 7=129(LC 14)
Max Uplift All uplift 100 lb or less at joint(s) 5, 6, 7, 4
Max Grav All reactions 250 lb or less at joint(s) 5, 4 except 6=529(LC 21), 7=558(LC 1)

FORCES. (lb) - Max. Comp./Max. Ten. - All forces 250 (lb) or less except when shown.
TOP CHORD 3-6=-485/113
WEBS 2-7=-461/54

NOTES-
1) Wind: ASCE 7-10; Vult=110mph (3-second gust) Vasd=87mph; TCDL=7.2psf; BCDL=4.2psf; h=25ft; Cat. II; Exp C; Enclosed; MWFRS (envelope) and C-C Exterior(2) 0-0-0 to 3-0-0, Interior(1) 3-0-0 to 11-10-15 zone; cantilever left and right exposed ; porch left and right exposed;C-C for members and forces & MWFRS for reactions shown; Lumber DOL=1.33 plate grip DOL=1.33
2) TCLL: ASCE 7-10; Pf=30.0 psf (flat roof snow); Category II; Exp C; Partially Exp.; Ct=1.00
3) Unbalanced snow loads have been considered for this design.
4) This truss has been designed for a 10.0 psf bottom chord live load nonconcurrent with any other live loads.
5) * This truss has been designed for a live load of 20.0psf on the bottom chord in all areas where a rectangle 3-6-0 tall by 2-0-0 wide will fit between the bottom chord and any other members.
6) A plate rating reduction of 20% has been applied for the green lumber members.
7) Refer to girder(s) for truss to truss connections.
8) Provide mechanical connection (by others) of truss to bearing plate at joint(s) 4.
9) Provide mechanical connection (by others) of truss to bearing plate capable of withstanding 100 lb uplift at joint(s) 5, 6, 7, 4.
10) Beveled plate or shim required to provide full bearing surface with truss chord at joint(s) 4.
11) This truss is designed for a creep factor of 3.01, which is used to calculate the Vert(CT) deflection per ANSI/TPI 1.

December 11,2019

WARNING - Verify design parameters and READ NOTES ON THIS AND INCLUDED MITEK REFERENCE PAGE MII-7473 rev. 10/03/2015 BEFORE USE.
Design valid for use only with MiTek® connectors. This design is based only upon parameters shown, and is for an individual building component, not a truss system. Before use, the building designer must verify the applicability of design parameters and properly incorporate this design into the overall building design. Bracing indicated is to prevent buckling of individual truss web and/or chord members only. Additional temporary and permanent bracing is always required for stability and to prevent collapse with possible personal injury and property damage. For general guidance regarding the fabrication, storage, delivery, erection and bracing of trusses and truss systems, see ***ANSI/TPI1 Quality Criteria, DSB-89 and BCSI Building Component Safety Information*** available from Truss Plate Institute, 218 N. Lee Street, Suite 312, Alexandria, VA 22314.

MiTek USA, Inc.
400 Sunrise Avenue, Suite 270
Roseville, CA 95661

Job	Truss	Truss Type	Qty	Ply	ESPINOZA R60548678
J19-319	J07	Jack-Closed	3	1	Job Reference (optional)

Stockton Truss, STOCKTON, CA 95215 8.330 s Dec 5 2019 MiTek Industries, Inc. Tue Dec 10 11:44:23 2019 Page 1
ID:eURouH3h5RzkGDllLuCRE8yWpf_-VVj9ws7rDuuviLtWrCHn7S5uf_gIZf75Io5ye3yANa6

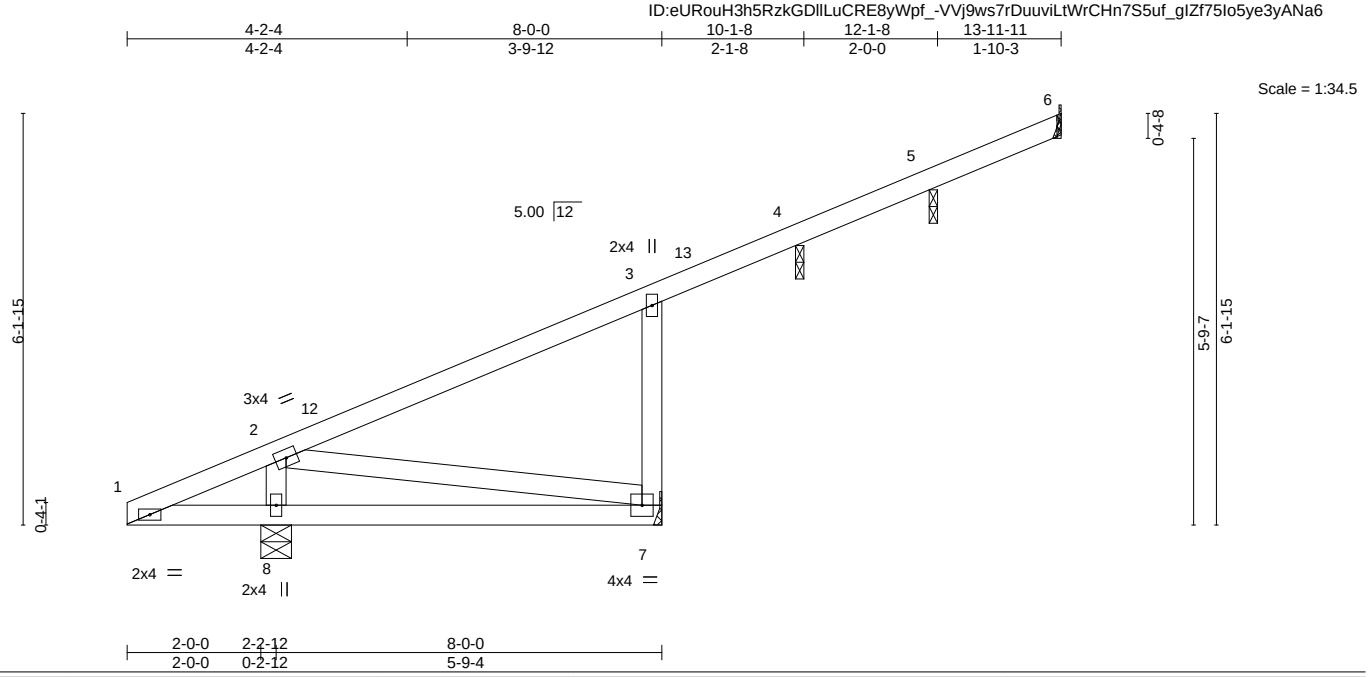

LOADING (psf)		SPACING-	2-0-0	CSI.		DEFL.	in	(loc)	l/defl	L/d	PLATES	GRIP
TCLL	30.0	Plate Grip DOL	1.15	TC	0.28	Vert(LL)	-0.02	7-8	>999	240	MT20	220/195
(Roof Snow=30.0)		Lumber DOL	1.15	BC	0.16	Vert(CT)	-0.08	7-8	>885	180		
TCDL	14.0	Rep Stress Incr	YES	WB	0.07	Horz(CT)	-0.00	6	n/a	n/a		
BCLL	0.0 *	Code	IBC2015/TPI2014	Matrix-MP		Wind(LL)	0.05	7-8	>999	360	Weight: 45 lb	FT = 20%
BCDL	10.0											

LUMBER-
TOP CHORD 2x4 DF No.1&Btr G
BOT CHORD 2x4 DF No.1&Btr G
WEBS 2x4 DF Std G

BRACING-
TOP CHORD Structural wood sheathing directly applied or 6-0-0 oc purlins, except end verticals.
BOT CHORD Rigid ceiling directly applied or 6-0-0 oc bracing.

REACTIONS. All bearings Mechanical except (jt=length) 8=0-5-8, 4=0-1-8, 5=0-1-8.
(lb) - Max Horz 8=151(LC 14)
Max Uplift All uplift 100 lb or less at joint(s) 6, 7, 8, 4, 5
Max Grav All reactions 250 lb or less at joint(s) 6, 4, 5 except 7=491(LC 21), 8=558(LC 1)

FORCES. (lb) - Max. Comp./Max. Ten. - All forces 250 (lb) or less except when shown.
TOP CHORD 3-7=-447/114
WEBS 2-8=-461/39

NOTES-
1) Wind: ASCE 7-10; Vult=110mph (3-second gust) Vasd=87mph; TCDL=7.2psf; BCDL=4.2psf; h=25ft; Cat. II; Exp C; Enclosed; MWFRS (envelope) and C-C Exterior(2) 0-0-0 to 3-0-0, Interior(1) 3-0-0 to 13-10-15 zone; cantilever left and right exposed ; porch left and right exposed;C-C for members and forces & MWFRS for reactions shown; Lumber DOL=1.33 plate grip DOL=1.33
2) TCLL: ASCE 7-10; Pf=30.0 psf (flat roof snow); Category II; Exp C; Partially Exp.; Ct=1.00
3) Unbalanced snow loads have been considered for this design.
4) This truss has been designed for a 10.0 psf bottom chord live load nonconcurrent with any other live loads.
5) * This truss has been designed for a live load of 20.0psf on the bottom chord in all areas where a rectangle 3-6-0 tall by 2-0-0 wide will fit between the bottom chord and any other members.
6) A plate rating reduction of 20% has been applied for the green lumber members.
7) Refer to girder(s) for truss to truss connections.
8) Provide mechanical connection (by others) of truss to bearing plate at joint(s) 4, 5.
9) Provide mechanical connection (by others) of truss to bearing plate capable of withstanding 100 lb uplift at joint(s) 6, 7, 8, 4, 5.
10) Beveled plate or shim required to provide full bearing surface with truss chord at joint(s) 4, 5.
11) This truss is designed for a creep factor of 3.01, which is used to calculate the Vert(CT) deflection per ANSI/TPI 1.

December 11,2019

WARNING - Verify design parameters and READ NOTES ON THIS AND INCLUDED MITEK REFERENCE PAGE MII-7473 rev. 10/03/2015 BEFORE USE.
Design valid for use only with MiTek® connectors. This design is based only upon parameters shown, and is for an individual building component, not a truss system. Before use, the building designer must verify the applicability of design parameters and properly incorporate this design into the overall building design. Bracing indicated is to prevent buckling of individual truss web and/or chord members only. Additional temporary and permanent bracing is always required for stability and to prevent collapse with possible personal injury and property damage. For general guidance regarding the fabrication, storage, delivery, erection and bracing of trusses and truss systems, see ***ANSI/TPI1 Quality Criteria, DSB-89 and BCSI Building Component Safety Information*** available from Truss Plate Institute, 218 N. Lee Street, Suite 312, Alexandria, VA 22314.

MiTek USA, Inc.
400 Sunrise Avenue, Suite 270
Roseville, CA 95661

Job	Truss	Truss Type	Qty	Ply	ESPINOZA R60548679
J19-319	J08	Jack-Open	4	1	Job Reference (optional)

Stockton Truss, STOCKTON, CA 95215 8.330 s Dec 5 2019 MiTek Industries, Inc. Tue Dec 10 11:44:24 2019 Page 1
ID:eURouH3h5RzkGDllLuCRE8yWpf_-zhHX7C8T_B0lKVSiPwo0gge5GO0pI7TEWSrVAVyANa5

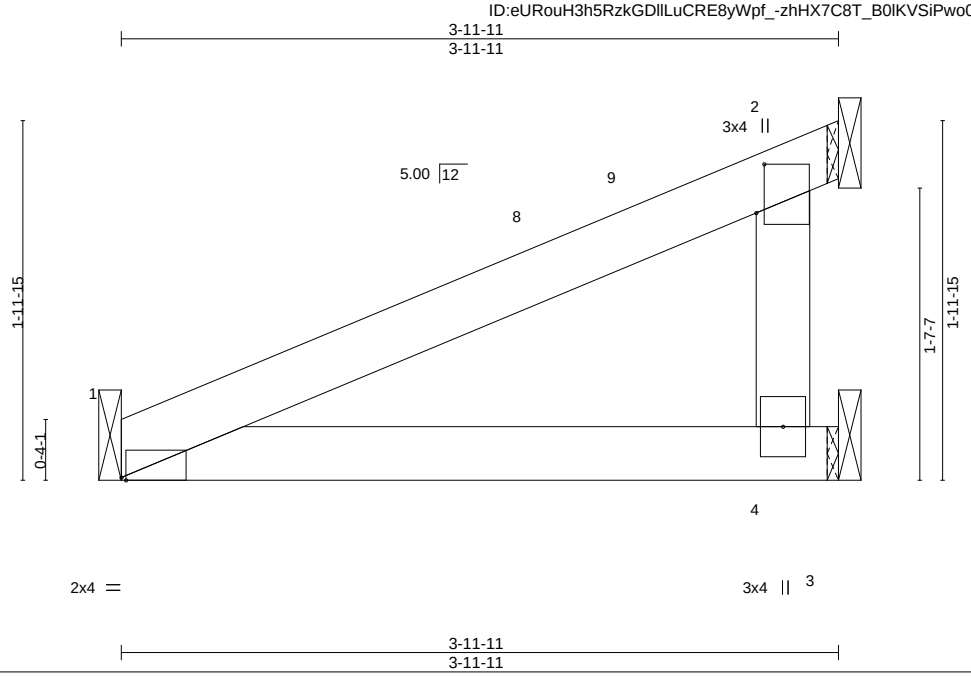

Plate Offsets (X,Y)-- [1:0-0-5,Edge], [2:0-3-4,0-0-9]

LOADING (psf)		SPACING-	2-0-0	CSI.		DEFL.	in	(loc)	l/defl	L/d	PLATES	GRIP
TCLL	30.0	Plate Grip DOL	1.15	TC	0.16	Vert(LL)	-0.01	4-7	>999	240	MT20	220/195
(Roof Snow=30.0)		Lumber DOL	1.15	BC	0.15	Vert(CT)	-0.03	4-7	>999	180		
TCDL	14.0	Rep Stress Incr	YES	WB	0.00	Horz(CT)	-0.00	4	n/a	n/a		
BCLL	0.0 *	Code	IBC2015/TPI2014	Matrix-MP		Wind(LL)	0.02	4-7	>999	360	Weight: 13 lb	FT = 20%
BCDL	10.0											

LUMBER-
TOP CHORD 2x4 DF No.1&Btr G
BOT CHORD 2x4 DF No.1&Btr G
WEBS 2x4 DF Std G

BRACING-
TOP CHORD Structural wood sheathing directly applied or 3-11-11 oc purlins.
BOT CHORD Rigid ceiling directly applied or 10-0-0 oc bracing.

REACTIONS. (lb/size) 1=198/Mechanical, 4=68/Mechanical, 2=136/Mechanical
Max Horz 2=40(LC 14)
Max Uplift 1=-32(LC 11), 4=-14(LC 11), 2=-5(LC 14)
Max Grav 1=199(LC 20), 4=83(LC 5), 2=143(LC 20)

FORCES. (lb) - Max. Comp./Max. Ten. - All forces 250 (lb) or less except when shown.

NOTES-
1) Wind: ASCE 7-10; Vult=110mph (3-second gust) Vasd=87mph; TCDL=7.2psf; BCDL=4.2psf; h=25ft; Cat. II; Exp C; Enclosed; MWFRS (envelope) and C-C Exterior(2) 0-0-0 to 3-0-0, Interior(1) 3-0-0 to 3-8-0 zone; cantilever left and right exposed ; porch left and right exposed;C-C for members and forces & MWFRS for reactions shown; Lumber DOL=1.33 plate grip DOL=1.33
2) TCLL: ASCE 7-10; Pf=30.0 psf (flat roof snow); Category II; Exp C; Partially Exp.; Ct=1.00
3) Unbalanced snow loads have been considered for this design.
4) This truss has been designed for a 10.0 psf bottom chord live load nonconcurrent with any other live loads.
5) * This truss has been designed for a live load of 20.0psf on the bottom chord in all areas where a rectangle 3-6-0 tall by 2-0-0 wide will fit between the bottom chord and any other members.
6) A plate rating reduction of 20% has been applied for the green lumber members.
7) Refer to girder(s) for truss to truss connections.
8) Provide mechanical connection (by others) of truss to bearing plate capable of withstanding 100 lb uplift at joint(s) 1, 4, 2.
9) Gap between inside of top chord bearing and first diagonal or vertical web shall not exceed 0.500in.
10) This truss is designed for a creep factor of 3.01, which is used to calculate the Vert(CT) deflection per ANSI/TPI 1.

REGISTERED PROFESSIONAL ENGINEER
EDUARD TEODOSESCU
C 75435
EXP. 03/31/2020
STATE OF CALIFORNIA

December 11,2019

WARNING - Verify design parameters and READ NOTES ON THIS AND INCLUDED MITEK REFERENCE PAGE MII-7473 rev. 10/03/2015 BEFORE USE.
Design valid for use only with MiTek® connectors. This design is based only upon parameters shown, and is for an individual building component, not a truss system. Before use, the building designer must verify the applicability of design parameters and properly incorporate this design into the overall building design. Bracing indicated is to prevent buckling of individual truss web and/or chord members only. Additional temporary and permanent bracing is always required for stability and to prevent collapse with possible personal injury and property damage. For general guidance regarding the fabrication, storage, delivery, erection and bracing of trusses and truss systems, see ***ANSI/TPI1 Quality Criteria, DSB-89 and BCSI Building Component Safety Information*** available from Truss Plate Institute, 218 N. Lee Street, Suite 312, Alexandria, VA 22314.

MiTek USA, Inc.
400 Sunrise Avenue, Suite 270
Roseville, CA 95661

Job	Truss	Truss Type	Qty	Ply	ESPINOZA
J19-319	J09	Jack-Open	3	1	R60548680
					Job Reference (optional)

Stockton Truss, STOCKTON, CA 95215 8.330 s Dec 5 2019 MiTek Industries, Inc. Tue Dec 10 11:44:25 2019 Page 1
ID:eURouH3h5RzkGDllLuCRE8yWpf_-RurvLY96lV9cxf1vzdJFDtBBTnJn1ajOl6a2iyyANa4

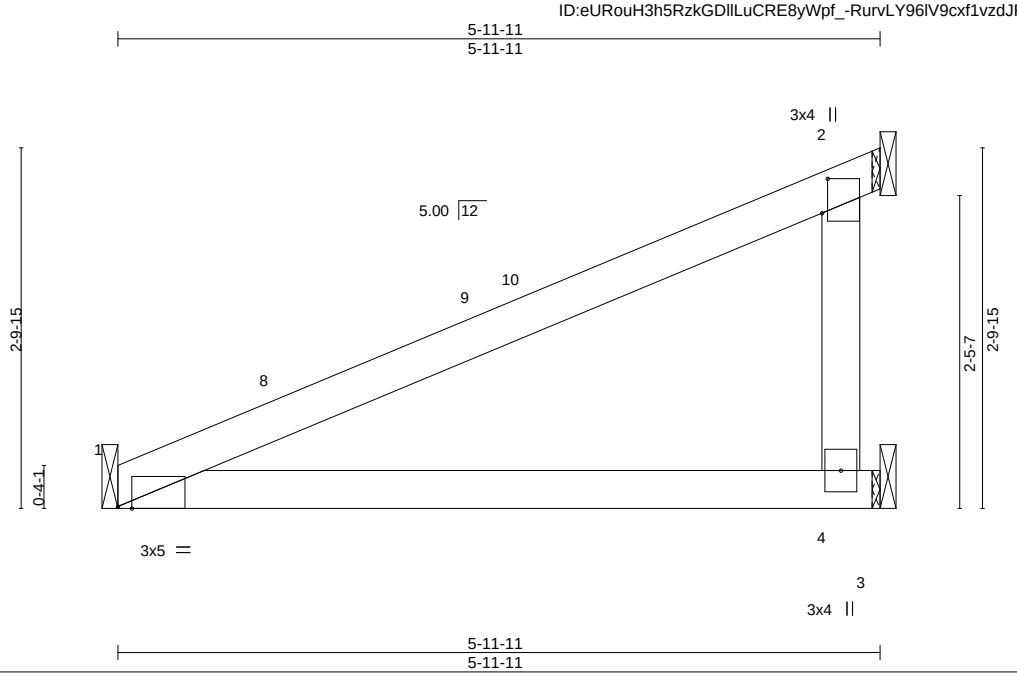

Plate Offsets (X,Y)-- [1:0-1-5,Edge], [2:0-3-4,0-0-9]

LOADING (psf)		SPACING-	2-0-0	CSI.		DEFL.	in	(loc)	l/defl	L/d	PLATES	GRIP
TCLL	30.0	Plate Grip DOL	1.15	TC	0.45	Vert(LL)	-0.06	4-7	>999	240	MT20	220/195
(Roof Snow=30.0)		Lumber DOL	1.15	BC	0.35	Vert(CT)	-0.18	4-7	>387	180		
TCDL	14.0	Rep Stress Incr	YES	WB	0.00	Horz(CT)	-0.00	4	n/a	n/a		
BCLL	0.0 *	Code	IBC2015/TPI2014	Matrix-MP		Wind(LL)	0.09	4-7	>730	360	Weight: 20 lb	FT = 20%
BCDL	10.0											

LUMBER-
TOP CHORD 2x4 DF No.1&Btr G
BOT CHORD 2x4 DF No.1&Btr G
WEBS 2x4 DF Std G

BRACING-
TOP CHORD Structural wood sheathing directly applied or 5-11-11 oc purlins.
BOT CHORD Rigid ceiling directly applied or 10-0-0 oc bracing.

REACTIONS. (lb/size) 1=306/Mechanical, 4=97/Mechanical, 2=215/Mechanical
Max Horz 2=61(LC 14)
Max Uplift 1=-50(LC 11), 4=-24(LC 11), 2=-8(LC 14)
Max Grav 1=313(LC 20), 4=122(LC 5), 2=240(LC 20)

FORCES. (lb) - Max. Comp./Max. Ten. - All forces 250 (lb) or less except when shown.

NOTES-
1) Wind: ASCE 7-10; Vult=110mph (3-second gust) Vasd=87mph; TCDL=7.2psf; BCDL=4.2psf; h=25ft; Cat. II; Exp C; Enclosed; MWFRS (envelope) and C-C Exterior(2) 0-0-0 to 3-0-0, Interior(1) 3-0-0 to 5-8-0 zone; cantilever left and right exposed ; porch left and right exposed;C-C for members and forces & MWFRS for reactions shown; Lumber DOL=1.33 plate grip DOL=1.33
2) TCLL: ASCE 7-10; Pf=30.0 psf (flat roof snow); Category II; Exp C; Partially Exp.; Ct=1.00
3) Unbalanced snow loads have been considered for this design.
4) This truss has been designed for a 10.0 psf bottom chord live load nonconcurrent with any other live loads.
5) * This truss has been designed for a live load of 20.0psf on the bottom chord in all areas where a rectangle 3-6-0 tall by 2-0-0 wide will fit between the bottom chord and any other members.
6) A plate rating reduction of 20% has been applied for the green lumber members.
7) Refer to girder(s) for truss to truss connections.
8) Provide mechanical connection (by others) of truss to bearing plate capable of withstanding 100 lb uplift at joint(s) 1, 4, 2.
9) Gap between inside of top chord bearing and first diagonal or vertical web shall not exceed 0.500in.
10) This truss is designed for a creep factor of 3.01, which is used to calculate the Vert(CT) deflection per ANSI/TPI 1.

December 11,2019

WARNING - Verify design parameters and READ NOTES ON THIS AND INCLUDED MITEK REFERENCE PAGE MII-7473 rev. 10/03/2015 BEFORE USE.
Design valid for use only with MiTek® connectors. This design is based only upon parameters shown, and is for an individual building component, not a truss system. Before use, the building designer must verify the applicability of design parameters and properly incorporate this design into the overall building design. Bracing indicated is to prevent buckling of individual truss web and/or chord members only. Additional temporary and permanent bracing is always required for stability and to prevent collapse with possible personal injury and property damage. For general guidance regarding the fabrication, storage, delivery, erection and bracing of trusses and truss systems, see ***ANSI/TPI1 Quality Criteria, DSB-89 and BCSI Building Component Safety Information*** available from Truss Plate Institute, 218 N. Lee Street, Suite 312, Alexandria, VA 22314.

MiTek USA, Inc.
400 Sunrise Avenue, Suite 270
Roseville, CA 95661

Job	Truss	Truss Type	Qty	Ply	ESPINOZA R60548681
J19-319	J10	Jack-Closed	1	1	Job Reference (optional)

Stockton Truss, STOCKTON, CA 95215 8.330 s Dec 5 2019 MiTek Industries, Inc. Tue Dec 10 11:44:26 2019 Page 1
ID:eURouH3h5RzkGDllLuCRE8yWpf_-v4PHYu9kWpHTZpc5XLqUl5jNYBgfm0iX_mKcEOyANa3

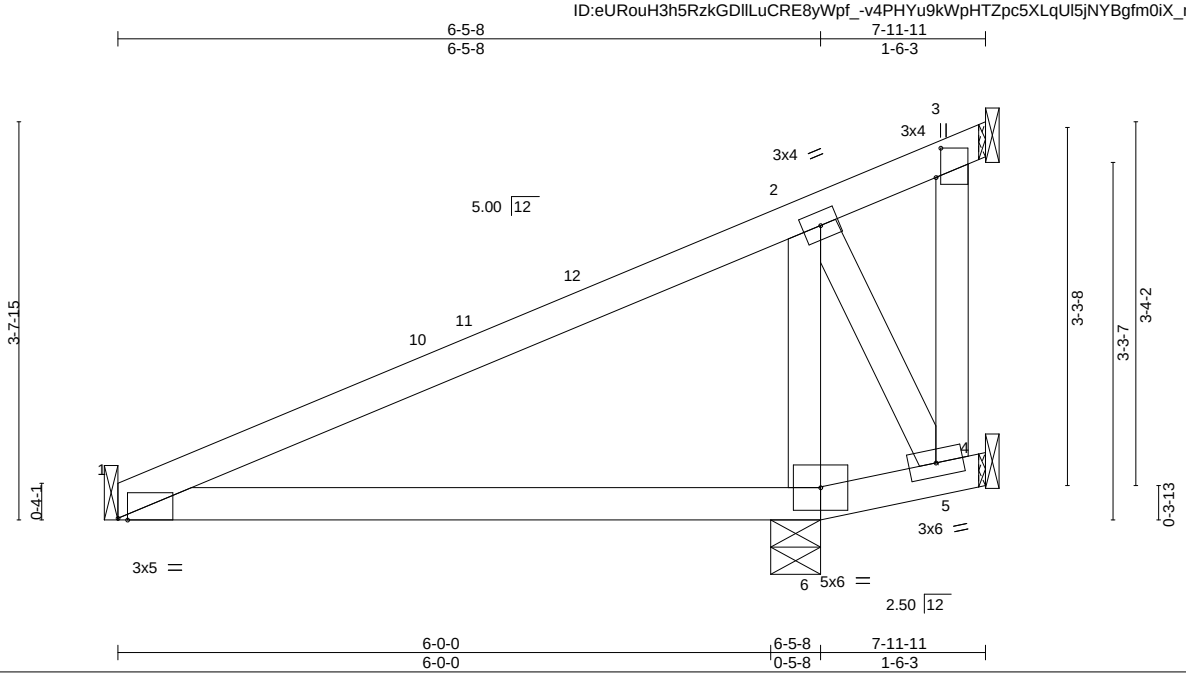

Plate Offsets (X,Y)-- [1:0-1-1,Edge], [3:0-3-4,0-0-9]

LOADING (psf)		SPACING-	2-0-0	CSI.		DEFL.	in	(loc)	l/defl	L/d	PLATES	GRIP
TCLL	30.0	Plate Grip DOL	1.15	TC	0.43	Vert(LL)	-0.06	6-9	>999	240	MT20	220/195
(Roof Snow=30.0)		Lumber DOL	1.15	BC	0.31	Vert(CT)	-0.21	6-9	>367	180		
TCDL	14.0	Rep Stress Incr	YES	WB	0.08	Horz(CT)	-0.00	1	n/a	n/a		
BCLL	0.0 *	Code	IBC2015/TPI2014	Matrix-MP		Wind(LL)	0.12	6-9	>662	360	Weight: 34 lb	FT = 20%
BCDL	10.0											

LUMBER-
TOP CHORD 2x4 DF No.1&Btr G
BOT CHORD 2x4 DF No.1&Btr G
WEBS 2x4 DF Std G

BRACING-
TOP CHORD Structural wood sheathing directly applied or 6-0-0 oc purlins, except end verticals.
BOT CHORD Rigid ceiling directly applied or 6-0-0 oc bracing.

REACTIONS. All bearings Mechanical except (jt=length) 6=0-5-8.
(lb) - Max Horz 6=83(LC 14)
Max Uplift All uplift 100 lb or less at joint(s) 1, 6, 5 except 3=-171(LC 20)
Max Grav All reactions 250 lb or less at joint(s) 3 except 1=361(LC 20), 6=424(LC 20), 5=286(LC 20)

FORCES. (lb) - Max. Comp./Max. Ten. - All forces 250 (lb) or less except when shown.
WEBS 2-6=-358/96, 2-5=-274/213

NOTES-
1) Wind: ASCE 7-10; Vult=110mph (3-second gust) Vasd=87mph; TCDL=7.2psf; BCDL=4.2psf; h=25ft; Cat. II; Exp C; Enclosed; MWFRS (envelope) and C-C Exterior(2) 0-0-0 to 3-0-0, Interior(1) 3-0-0 to 7-8-0 zone; cantilever left and right exposed ; porch left and right exposed;C-C for members and forces & MWFRS for reactions shown; Lumber DOL=1.33 plate grip DOL=1.33
2) TCLL: ASCE 7-10; Pf=30.0 psf (flat roof snow); Category II; Exp C; Partially Exp.; Ct=1.00
3) Unbalanced snow loads have been considered for this design.
4) This truss has been designed for a 10.0 psf bottom chord live load nonconcurrent with any other live loads.
5) * This truss has been designed for a live load of 20.0psf on the bottom chord in all areas where a rectangle 3-6-0 tall by 2-0-0 wide will fit between the bottom chord and any other members.
6) A plate rating reduction of 20% has been applied for the green lumber members.
7) Refer to girder(s) for truss to truss connections.
8) Provide mechanical connection (by others) of truss to bearing plate capable of withstanding 100 lb uplift at joint(s) 1, 6, 5 except (jt=lb) 3=171.
9) Gap between inside of top chord bearing and first diagonal or vertical web shall not exceed 0.500in.
10) This truss is designed for a creep factor of 3.01, which is used to calculate the Vert(CT) deflection per ANSI/TPI 1.

December 11,2019

WARNING - Verify design parameters and READ NOTES ON THIS AND INCLUDED MITEK REFERENCE PAGE MII-7473 rev. 10/03/2015 BEFORE USE.
Design valid for use only with MiTek® connectors. This design is based only upon parameters shown, and is for an individual building component, not a truss system. Before use, the building designer must verify the applicability of design parameters and properly incorporate this design into the overall building design. Bracing indicated is to prevent buckling of individual truss web and/or chord members only. Additional temporary and permanent bracing is always required for stability and to prevent collapse with possible personal injury and property damage. For general guidance regarding the fabrication, storage, delivery, erection and bracing of trusses and truss systems, see ***ANSI/TPI1 Quality Criteria, DSB-89 and BCSI Building Component Safety Information*** available from Truss Plate Institute, 218 N. Lee Street, Suite 312, Alexandria, VA 22314.

MiTek USA, Inc.
400 Sunrise Avenue, Suite 270
Roseville, CA 95661

Job	Truss	Truss Type	Qty	Ply	ESPINOZA R60548682
J19-319	J11	JACK-CLOSED	1	1	Job Reference (optional)

Stockton Truss, STOCKTON, CA 95215 8.330 s Dec 5 2019 MiTek Industries, Inc. Tue Dec 10 11:44:27 2019 Page 1
ID:eURouH3h5RzkGDllLuCRE8yWpf_-NGzfmEAMH6PKBzBH42MjIIGZ2b?vVT3hDQ39nqyANa2

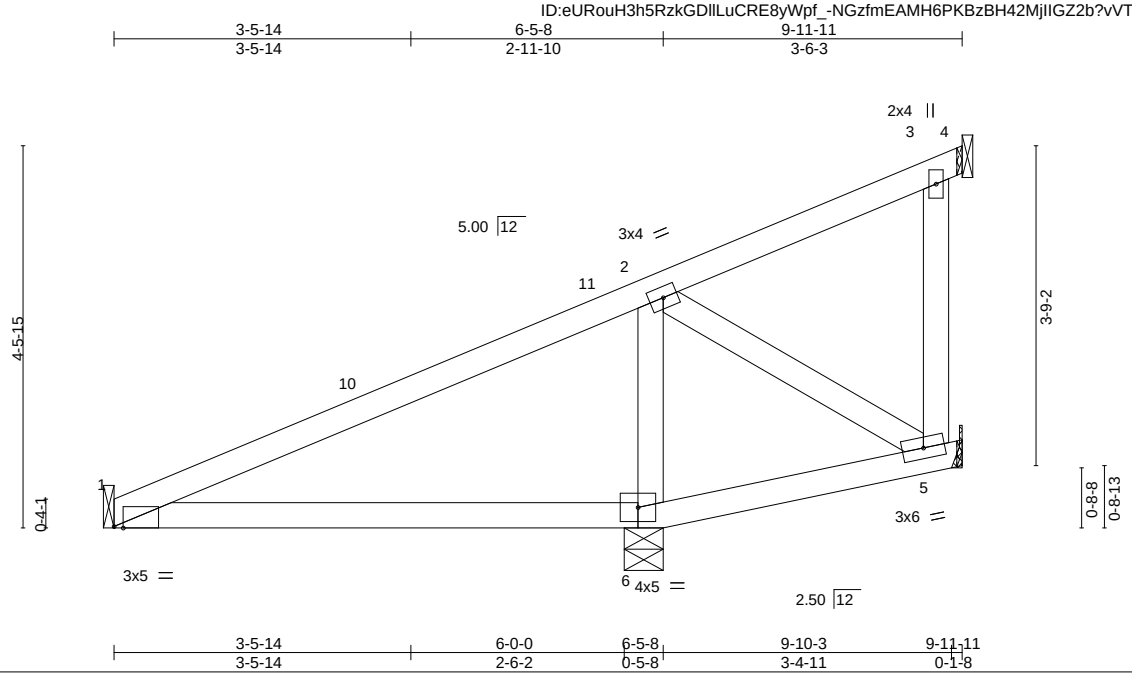

Plate Offsets (X,Y)-- [1:0-1-5,Edge]

LOADING (psf)		SPACING-	2-0-0	CSI.		DEFL.	in	(loc)	l/defl	L/d	PLATES	GRIP
TCLL	30.0	Plate Grip DOL	1.15	TC	0.38	Vert(LL)	-0.05	6-9	>999	240	MT20	220/195
(Roof Snow=30.0)		Lumber DOL	1.15	BC	0.31	Vert(CT)	-0.16	6-9	>459	180		
TCDL	14.0	Rep Stress Incr	YES	WB	0.07	Horz(CT)	0.00	1	n/a	n/a		
BCLL	0.0 *	Code IBC2015/TPI2014		Matrix-MSH		Wind(LL)	0.09	6-9	>867	360	Weight: 42 lb	FT = 20%
BCDL	10.0											

LUMBER-
TOP CHORD 2x4 DF No.1&Btr G
BOT CHORD 2x4 DF No.1&Btr G
WEBS 2x4 DF Std G

BRACING-
TOP CHORD Structural wood sheathing directly applied or 6-0-0 oc purlins, except end verticals.
BOT CHORD Rigid ceiling directly applied or 10-0-0 oc bracing.

REACTIONS. All bearings Mechanical except (jt=length) 6=0-5-8, 5=Mechanical.
(lb) - Max Horz 6=107(LC 14)
Max Uplift All uplift 100 lb or less at joint(s) 1, 4, 6, 5
Max Grav All reactions 250 lb or less at joint(s) 4, 5 except 1=329(LC 20), 6=585(LC 20)

FORCES. (lb) - Max. Comp./Max. Ten. - All forces 250 (lb) or less except when shown.
WEBS 2-6=-458/65

NOTES-
1) Wind: ASCE 7-10; Vult=110mph (3-second gust) Vasd=87mph; TCDL=7.2psf; BCDL=4.2psf; h=25ft; Cat. II; Exp C; Enclosed; MWFRS (envelope) and C-C Exterior(2) 0-0-0 to 3-0-0, Interior(1) 3-0-0 to 9-10-15 zone; cantilever left and right exposed ; porch left and right exposed;C-C for members and forces & MWFRS for reactions shown; Lumber DOL=1.33 plate grip DOL=1.33
2) TCLL: ASCE 7-10; Pf=30.0 psf (flat roof snow); Category II; Exp C; Partially Exp.; Ct=1.00
3) Unbalanced snow loads have been considered for this design.
4) This truss has been designed for a 10.0 psf bottom chord live load nonconcurrent with any other live loads.
5) * This truss has been designed for a live load of 20.0psf on the bottom chord in all areas where a rectangle 3-6-0 tall by 2-0-0 wide will fit between the bottom chord and any other members.
6) A plate rating reduction of 20% has been applied for the green lumber members.
7) Refer to girder(s) for truss to truss connections.
8) Refer to girder(s) for truss to truss connections.
9) Bearing at joint(s) 6 considers parallel to grain value using ANSI/TPI 1 angle to grain formula. Building designer should verify capacity of bearing surface.
10) Provide mechanical connection (by others) of truss to bearing plate capable of withstanding 100 lb uplift at joint(s) 1, 4, 6, 5.
11) This truss is designed for a creep factor of 3.01, which is used to calculate the Vert(CT) deflection per ANSI/TPI 1.

December 11,2019

WARNING - Verify design parameters and READ NOTES ON THIS AND INCLUDED MITEK REFERENCE PAGE MII-7473 rev. 10/03/2015 BEFORE USE.
Design valid for use only with MiTek® connectors. This design is based only upon parameters shown, and is for an individual building component, not a truss system. Before use, the building designer must verify the applicability of design parameters and properly incorporate this design into the overall building design. Bracing indicated is to prevent buckling of individual truss web and/or chord members only. Additional temporary and permanent bracing is always required for stability and to prevent collapse with possible personal injury and property damage. For general guidance regarding the fabrication, storage, delivery, erection and bracing of trusses and truss systems, see ***ANSI/TPI1 Quality Criteria, DSB-89 and BCSI Building Component Safety Information*** available from Truss Plate Institute, 218 N. Lee Street, Suite 312, Alexandria, VA 22314.

MiTek USA, Inc.
400 Sunrise Avenue, Suite 270
Roseville, CA 95661

Job	Truss	Truss Type	Qty	Ply	ESPINOZA R60548683
J19-319	J19	Jack-Closed	1	1	Job Reference (optional)

Stockton Truss, STOCKTON, CA 95215 8.330 s Dec 5 2019 MiTek Industries, Inc. Tue Dec 10 11:44:28 2019 Page 1
ID:eURouH3h5RzkGDllLuCRE8yWpf_-rTW2zaB_2QXBo7mUemtyqWpkp?KzEwNqR4piJHyANa1

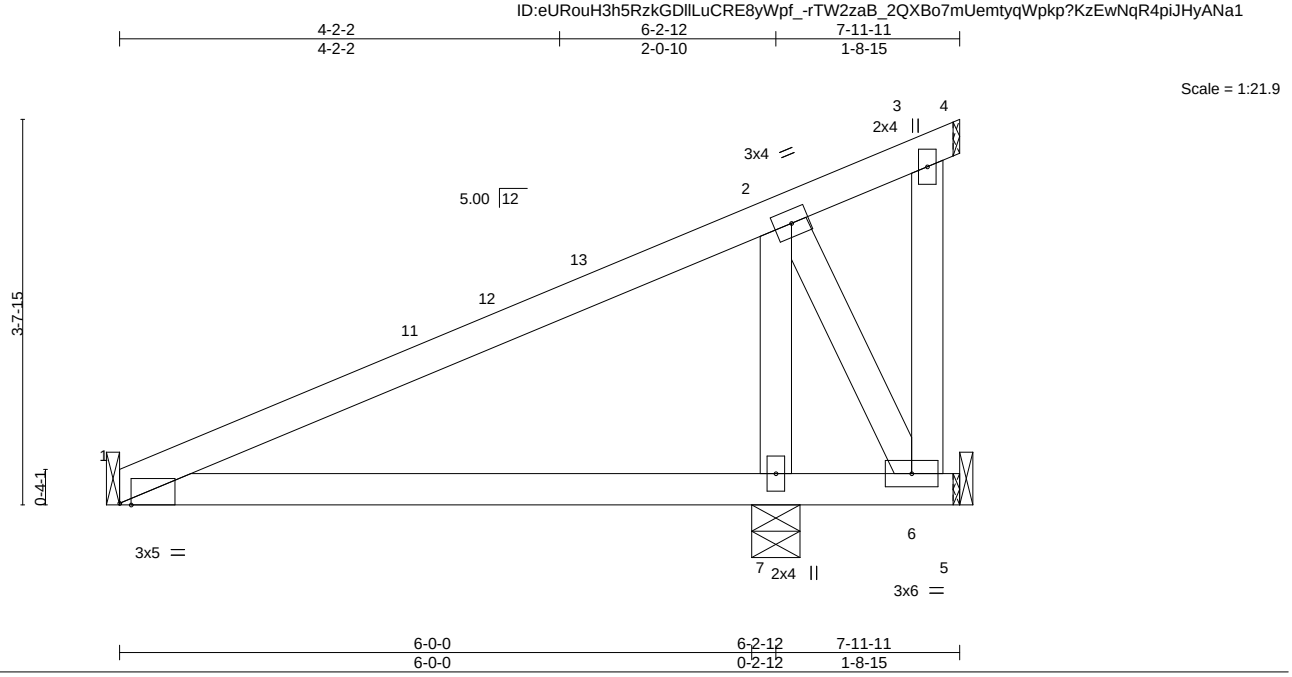

Plate Offsets (X,Y)-- [1:0-1-5,Edge]

LOADING (psf)		SPACING-	2-0-0	CSI.		DEFL.	in	(loc)	l/defl	L/d	PLATES	GRIP
TCLL	30.0	Plate Grip DOL	1.15	TC	0.38	Vert(LL)	-0.04	7-10	>999	240	MT20	220/195
(Roof Snow=30.0)		Lumber DOL	1.15	BC	0.32	Vert(CT)	-0.13	7-10	>583	180		
TCDL	14.0	Rep Stress Incr	YES	WB	0.07	Horz(CT)	-0.00	1	n/a	n/a		
BCLL	0.0 *	Code IBC2015/TPI2014		Matrix-MP		Wind(LL)	0.07	7-10	>999	360	Weight: 34 lb	FT = 20%
BCDL	10.0											

LUMBER-
TOP CHORD 2x4 DF No.1&Btr G
BOT CHORD 2x4 DF No.1&Btr G
WEBS 2x4 DF Std G

BRACING-
TOP CHORD Structural wood sheathing directly applied or 6-0-0 oc purlins, except end verticals.
BOT CHORD Rigid ceiling directly applied or 10-0-0 oc bracing.

REACTIONS. (lb/size) 1=314/Mechanical, 7=531/0-5-8, 6=17/Mechanical
Max Horz 7=86(LC 14)
Max Uplift 1=-27(LC 11), 7=-67(LC 10), 6=-45(LC 14)
Max Grav 1=319(LC 20), 7=568(LC 20), 6=44(LC 20)

FORCES. (lb) - Max. Comp./Max. Ten. - All forces 250 (lb) or less except when shown.
WEBS 2-7=-333/72

NOTES-
1) Wind: ASCE 7-10; Vult=110mph (3-second gust) Vasd=87mph; TCDL=7.2psf; BCDL=4.2psf; h=25ft; Cat. II; Exp C; Enclosed; MWFRS (envelope) and C-C Exterior(2) 0-0-0 to 3-0-0, Interior(1) 3-0-0 to 7-11-11 zone; cantilever left and right exposed ; porch left and right exposed;C-C for members and forces & MWFRS for reactions shown; Lumber DOL=1.33 plate grip DOL=1.33
2) TCLL: ASCE 7-10; Pf=30.0 psf (flat roof snow); Category II; Exp C; Partially Exp.; Ct=1.00
3) Unbalanced snow loads have been considered for this design.
4) This truss has been designed for a 10.0 psf bottom chord live load nonconcurrent with any other live loads.
5) * This truss has been designed for a live load of 20.0psf on the bottom chord in all areas where a rectangle 3-6-0 tall by 2-0-0 wide will fit between the bottom chord and any other members.
6) A plate rating reduction of 20% has been applied for the green lumber members.
7) Refer to girder(s) for truss to truss connections.
8) Provide mechanical connection (by others) of truss to bearing plate capable of withstanding 100 lb uplift at joint(s) 1, 7, 6.
9) This truss is designed for a creep factor of 3.01, which is used to calculate the Vert(CT) deflection per ANSI/TPI 1.

December 11,2019

WARNING - Verify design parameters and READ NOTES ON THIS AND INCLUDED MITEK REFERENCE PAGE MII-7473 rev. 10/03/2015 BEFORE USE.
Design valid for use only with MiTek® connectors. This design is based only upon parameters shown, and is for an individual building component, not a truss system. Before use, the building designer must verify the applicability of design parameters and properly incorporate this design into the overall building design. Bracing indicated is to prevent buckling of individual truss web and/or chord members only. Additional temporary and permanent bracing is always required for stability and to prevent collapse with possible personal injury and property damage. For general guidance regarding the fabrication, storage, delivery, erection and bracing of trusses and truss systems, see ***ANSI/TPI1 Quality Criteria, DSB-89 and BCSI Building Component Safety Information*** available from Truss Plate Institute, 218 N. Lee Street, Suite 312, Alexandria, VA 22314.

MiTek USA, Inc.
400 Sunrise Avenue, Suite 270
Roseville, CA 95661

Job	Truss	Truss Type	Qty	Ply	ESPINOZA R60548684
J19-319	JA4	Jack-Closed	3	1	Job Reference (optional)

Stockton Truss, STOCKTON, CA 95215 8.330 s Dec 5 2019 MiTek Industries, Inc. Tue Dec 10 11:44:29 2019 Page 1
ID:eURouH3h5RzkGDllLuCRE8yWpf_-Jf4QAwCcpkf2QGLgCTOBNjLtCPjuzNXzgkYGrjyANa0

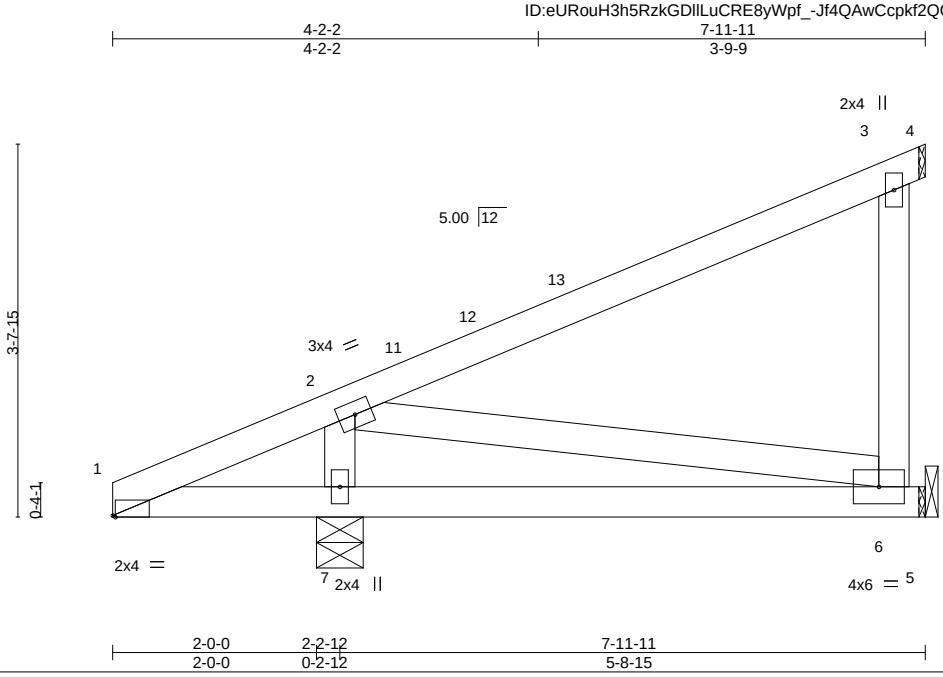

Plate Offsets (X,Y)-- [1:0-0-5,Edge]

LOADING (psf)		SPACING-	2-0-0	CSI.		DEFL.	in	(loc)	l/defl	L/d	PLATES	GRIP
TCLL	30.0	Plate Grip DOL	1.15	TC	0.40	Vert(LL)	-0.02	6-7	>999	240	MT20	220/195
(Roof Snow=30.0)		Lumber DOL	1.15	BC	0.15	Vert(CT)	-0.07	6-7	>968	180		
TCDL	14.0	Rep Stress Incr	YES	WB	0.08	Horz(CT)	-0.00	6	n/a	n/a		
BCLL	0.0 *	Code IBC2015/TPI2014		Matrix-MP		Wind(LL)	0.04	6-7	>999	360	Weight: 35 lb	FT = 20%
BCDL	10.0											

LUMBER-
TOP CHORD 2x4 DF No.1&Btr G
BOT CHORD 2x4 DF No.1&Btr G
WEBS 2x4 DF Std G

BRACING-
TOP CHORD Structural wood sheathing directly applied or 6-0-0 oc purlins, except end verticals.
BOT CHORD Rigid ceiling directly applied or 10-0-0 oc bracing.

REACTIONS. (lb/size) 6=278/Mechanical, 7=583/0-5-8
Max Horz 7=86(LC 14)
Max Uplift 6=-64(LC 11), 7=-56(LC 10)
Max Grav 6=330(LC 20), 7=600(LC 20)

FORCES. (lb) - Max. Comp./Max. Ten. - All forces 250 (lb) or less except when shown.
TOP CHORD 3-6=-267/113
WEBS 2-7=-537/99

NOTES-
1) Wind: ASCE 7-10; Vult=110mph (3-second gust) Vasd=87mph; TCDL=7.2psf; BCDL=4.2psf; h=25ft; Cat. II; Exp C; Enclosed; MWFRS (envelope) and C-C Exterior(2) 0-0-0 to 3-0-0, Interior(1) 3-0-0 to 7-11-11 zone; cantilever left and right exposed ; porch left and right exposed;C-C for members and forces & MWFRS for reactions shown; Lumber DOL=1.33 plate grip DOL=1.33
2) TCLL: ASCE 7-10; Pf=30.0 psf (flat roof snow); Category II; Exp C; Partially Exp.; Ct=1.00
3) Unbalanced snow loads have been considered for this design.
4) This truss has been designed for a 10.0 psf bottom chord live load nonconcurrent with any other live loads.
5) * This truss has been designed for a live load of 20.0psf on the bottom chord in all areas where a rectangle 3-6-0 tall by 2-0-0 wide will fit between the bottom chord and any other members.
6) A plate rating reduction of 20% has been applied for the green lumber members.
7) Refer to girder(s) for truss to truss connections.
8) Provide mechanical connection (by others) of truss to bearing plate capable of withstanding 100 lb uplift at joint(s) 6, 7.
9) This truss is designed for a creep factor of 3.01, which is used to calculate the Vert(CT) deflection per ANSI/TPI 1.

December 11,2019

WARNING - Verify design parameters and READ NOTES ON THIS AND INCLUDED MITEK REFERENCE PAGE MII-7473 rev. 10/03/2015 BEFORE USE.
Design valid for use only with MiTek® connectors. This design is based only upon parameters shown, and is for an individual building component, not a truss system. Before use, the building designer must verify the applicability of design parameters and properly incorporate this design into the overall building design. Bracing indicated is to prevent buckling of individual truss web and/or chord members only. Additional temporary and permanent bracing is always required for stability and to prevent collapse with possible personal injury and property damage. For general guidance regarding the fabrication, storage, delivery, erection and bracing of trusses and truss systems, see ***ANSI/TPI1 Quality Criteria, DSB-89 and BCSI Building Component Safety Information*** available from Truss Plate Institute, 218 N. Lee Street, Suite 312, Alexandria, VA 22314.

MiTek USA, Inc.
400 Sunrise Avenue, Suite 270
Roseville, CA 95661

Job	Truss	Truss Type	Qty	Ply	ESPINOZA R60548685
J19-319	JA5	Jack-Closed	2	1	Job Reference (optional)

Stockton Truss, STOCKTON, CA 95215 8.330 s Dec 5 2019 MiTek Industries, Inc. Tue Dec 10 11:44:30 2019 Page 1
ID:eURouH3h5RzkGDllLuCRE8yWpf_-nreoOGCEa1nv2QwsmAvQwxu5no4vioA7vOIpO9yANa?

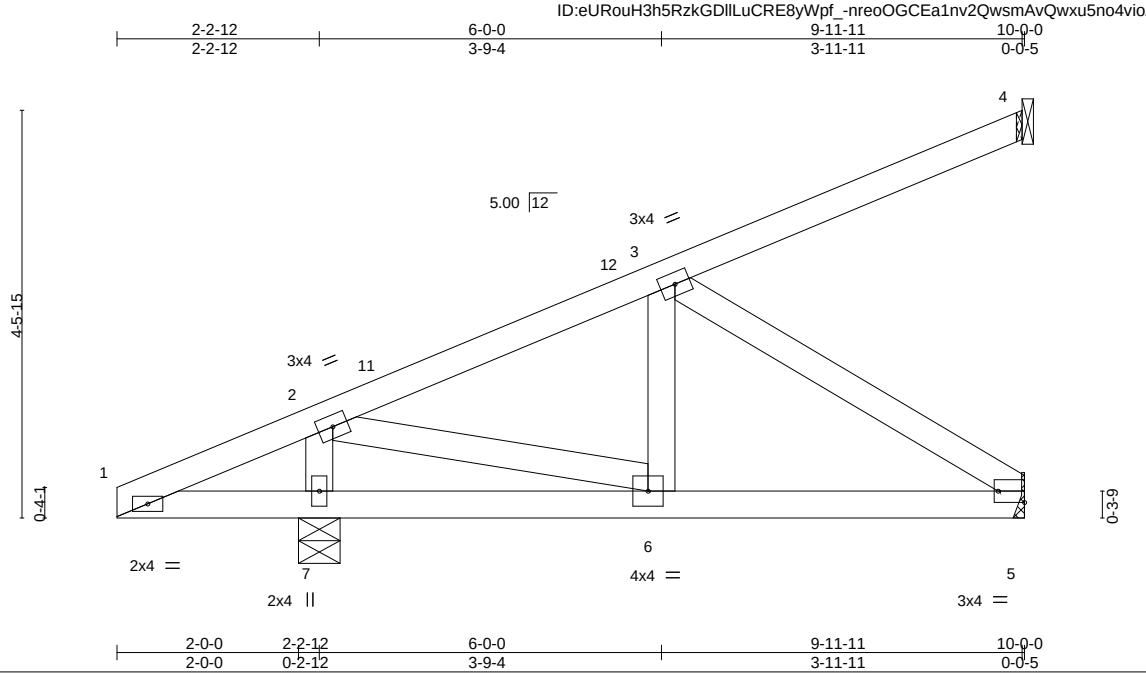

Plate Offsets (X,Y)-- [5:Edge,0-1-8]

LOADING (psf)		SPACING-	2-0-0	CSI.		DEFL.	in	(loc)	l/defl	L/d	PLATES	GRIP
TCLL	30.0	Plate Grip DOL	1.15	TC	0.22	Vert(LL)	-0.01	5-6	>999	240	MT20	220/195
(Roof Snow=30.0)		Lumber DOL	1.15	BC	0.10	Vert(CT)	-0.03	5-6	>999	180		
TCDL	14.0	Rep Stress Incr	YES	WB	0.24	Horz(CT)	-0.01	4	n/a	n/a		
BCLL	0.0 *	Code	IBC2015/TPI2014	Matrix-MSH		Wind(LL)	0.01	5-6	>999	360	Weight: 44 lb	FT = 20%
BCDL	10.0											

LUMBER-
TOP CHORD 2x4 DF No.1&Btr G
BOT CHORD 2x4 DF No.1&Btr G
WEBS 2x4 DF Std G

BRACING-
TOP CHORD Structural wood sheathing directly applied or 6-0-0 oc purlins.
BOT CHORD Rigid ceiling directly applied or 6-0-0 oc bracing.

REACTIONS. (lb/size) 4=138/Mechanical, 7=693/0-5-8, 5=241/Mechanical
Max Horz 7=107(LC 14)
Max Uplift 4=-25(LC 14), 7=-68(LC 10), 5=-65(LC 11)
Max Grav 4=180(LC 20), 7=723(LC 20), 5=275(LC 20)

FORCES. (lb) - Max. Comp./Max. Ten. - All forces 250 (lb) or less except when shown.
TOP CHORD 2-3=-466/181
BOT CHORD 5-6=-266/379
WEBS 2-7=-625/246, 2-6=-216/550, 3-5=-448/314

NOTES-
1) Wind: ASCE 7-10; Vult=110mph (3-second gust) Vasd=87mph; TCDL=7.2psf; BCDL=4.2psf; h=25ft; Cat. II; Exp C; Enclosed; MWFRS (envelope) and C-C Exterior(2) 0-0-0 to 3-0-0, Interior(1) 3-0-0 to 9-10-15 zone; cantilever left and right exposed ; porch left and right exposed;C-C for members and forces & MWFRS for reactions shown; Lumber DOL=1.33 plate grip DOL=1.33
2) TCLL: ASCE 7-10; Pf=30.0 psf (flat roof snow); Category II; Exp C; Partially Exp.; Ct=1.00
3) Unbalanced snow loads have been considered for this design.
4) This truss has been designed for a 10.0 psf bottom chord live load nonconcurrent with any other live loads.
5) * This truss has been designed for a live load of 20.0psf on the bottom chord in all areas where a rectangle 3-6-0 tall by 2-0-0 wide will fit between the bottom chord and any other members.
6) A plate rating reduction of 20% has been applied for the green lumber members.
7) Refer to girder(s) for truss to truss connections.
8) Refer to girder(s) for truss to truss connections.
9) Provide mechanical connection (by others) of truss to bearing plate capable of withstanding 100 lb uplift at joint(s) 4, 7, 5.
10) This truss is designed for a creep factor of 3.01, which is used to calculate the Vert(CT) deflection per ANSI/TPI 1.

December 11,2019

WARNING - Verify design parameters and READ NOTES ON THIS AND INCLUDED MITEK REFERENCE PAGE MII-7473 rev. 10/03/2015 BEFORE USE.
Design valid for use only with MiTek® connectors. This design is based only upon parameters shown, and is for an individual building component, not a truss system. Before use, the building designer must verify the applicability of design parameters and properly incorporate this design into the overall building design. Bracing indicated is to prevent buckling of individual truss web and/or chord members only. Additional temporary and permanent bracing is always required for stability and to prevent collapse with possible personal injury and property damage. For general guidance regarding the fabrication, storage, delivery, erection and bracing of trusses and truss systems, see ***ANSI/TPI1 Quality Criteria, DSB-89 and BCSI Building Component Safety Information*** available from Truss Plate Institute, 218 N. Lee Street, Suite 312, Alexandria, VA 22314.

MiTek USA, Inc.
400 Sunrise Avenue, Suite 270
Roseville, CA 95661

Job	Truss	Truss Type	Qty	Ply	ESPINOZA R60548686
J19-319	JA6	Jack-Closed	1	1	Job Reference (optional)

Stockton Truss, STOCKTON, CA 95215 8.330 s Dec 5 2019 MiTek Industries, Inc. Tue Dec 10 11:44:31 2019 Page 1
ID:eURouH3h5RzkGDllLuCRE8yWpf_-G2CAbcDsKLvmgaV3JuQfS8RHSCQORFwG711NwcyANa_

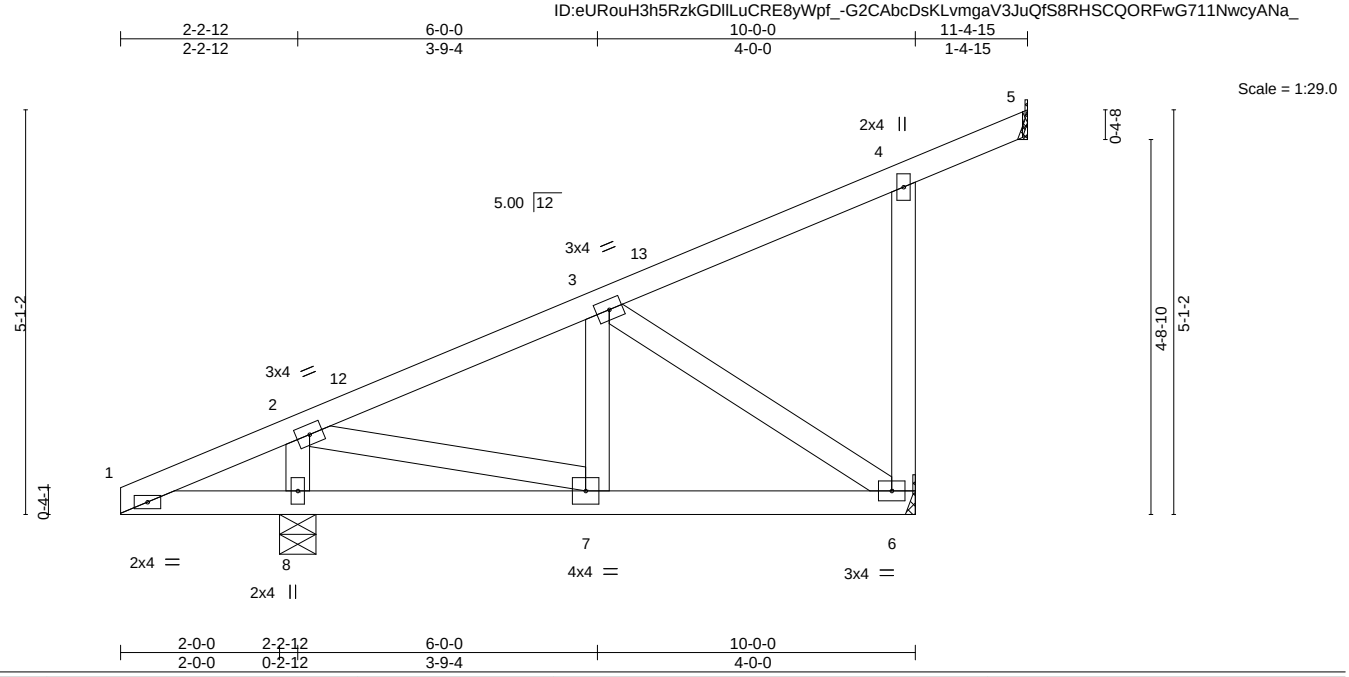

LOADING (psf)		SPACING-	2-0-0	CSI.		DEFL.	in	(loc)	l/defl	L/d	PLATES	GRIP
TCLL	30.0	Plate Grip DOL	1.15	TC	0.16	Vert(LL)	-0.01	6-7	>999	240	MT20	220/195
(Roof Snow=30.0)		Lumber DOL	1.15	BC	0.09	Vert(CT)	-0.02	6-7	>999	180		
TCDL	14.0	Rep Stress Incr	YES	WB	0.21	Horz(CT)	-0.01	5	n/a	n/a		
BCLL	0.0 *	Code	IBC2015/TPI2014	Matrix-MSH		Wind(LL)	0.01	6-7	>999	360	Weight: 51 lb	FT = 20%
BCDL	10.0											

LUMBER-
TOP CHORD 2x4 DF No.1&Btr G
BOT CHORD 2x4 DF No.1&Btr G
WEBS 2x4 DF Std G

BRACING-
TOP CHORD Structural wood sheathing directly applied or 6-0-0 oc purlins, except end verticals.
BOT CHORD Rigid ceiling directly applied or 6-0-0 oc bracing.

REACTIONS. (lb/size) 5=14/Mechanical, 8=677/0-5-8, 6=504/Mechanical
Max Horz 8=123(LC 14)
Max Uplift 5=-4(LC 14), 8=-60(LC 10), 6=-90(LC 11)
Max Grav 5=18(LC 21), 8=691(LC 21), 6=614(LC 21)

FORCES. (lb) - Max. Comp./Max. Ten. - All forces 250 (lb) or less except when shown.
TOP CHORD 2-3=-404/131, 4-6=-373/69
BOT CHORD 6-7=-204/317
WEBS 2-8=-598/227, 2-7=-173/478, 3-6=-371/238

NOTES-
1) Wind: ASCE 7-10; Vult=110mph (3-second gust) Vasd=87mph; TCDL=7.2psf; BCDL=4.2psf; h=25ft; Cat. II; Exp C; Enclosed; MWFRS (envelope) and C-C Exterior(2) 0-0-0 to 3-0-0, Interior(1) 3-0-0 to 11-4-3 zone; cantilever left and right exposed ; porch left and right exposed;C-C for members and forces & MWFRS for reactions shown; Lumber DOL=1.33 plate grip DOL=1.33
2) TCLL: ASCE 7-10; Pf=30.0 psf (flat roof snow); Category II; Exp C; Partially Exp.; Ct=1.00
3) Unbalanced snow loads have been considered for this design.
4) This truss has been designed for a 10.0 psf bottom chord live load nonconcurrent with any other live loads.
5) * This truss has been designed for a live load of 20.0psf on the bottom chord in all areas where a rectangle 3-6-0 tall by 2-0-0 wide will fit between the bottom chord and any other members.
6) A plate rating reduction of 20% has been applied for the green lumber members.
7) Refer to girder(s) for truss to truss connections.
8) Provide mechanical connection (by others) of truss to bearing plate capable of withstanding 100 lb uplift at joint(s) 5, 8, 6.
9) This truss is designed for a creep factor of 3.01, which is used to calculate the Vert(CT) deflection per ANSI/TPI 1.

December 11,2019

WARNING - Verify design parameters and READ NOTES ON THIS AND INCLUDED MITEK REFERENCE PAGE MII-7473 rev. 10/03/2015 BEFORE USE.
Design valid for use only with MiTek® connectors. This design is based only upon parameters shown, and is for an individual building component, not a truss system. Before use, the building designer must verify the applicability of design parameters and properly incorporate this design into the overall building design. Bracing indicated is to prevent buckling of individual truss web and/or chord members only. Additional temporary and permanent bracing is always required for stability and to prevent collapse with possible personal injury and property damage. For general guidance regarding the fabrication, storage, delivery, erection and bracing of trusses and truss systems, see ***ANSI/TPI1 Quality Criteria, DSB-89 and BCSI Building Component Safety Information*** available from Truss Plate Institute, 218 N. Lee Street, Suite 312, Alexandria, VA 22314.

MiTek USA, Inc.
400 Sunrise Avenue, Suite 270
Roseville, CA 95661

Job	Truss	Truss Type	Qty	Ply	ESPINOZA R60548687
J19-319	JC6	Jack-Closed	1	1	Job Reference (optional)

Stockton Truss, STOCKTON, CA 95215 8.330 s Dec 5 2019 MiTek Industries, Inc. Tue Dec 10 11:44:31 2019 Page 1

ID:eURouH3h5RzkGDllLuCRE8yWpf_-G2CAbcDsKLvmgaV3JuQfS8RFYCP2RH9G711NwcyANa_

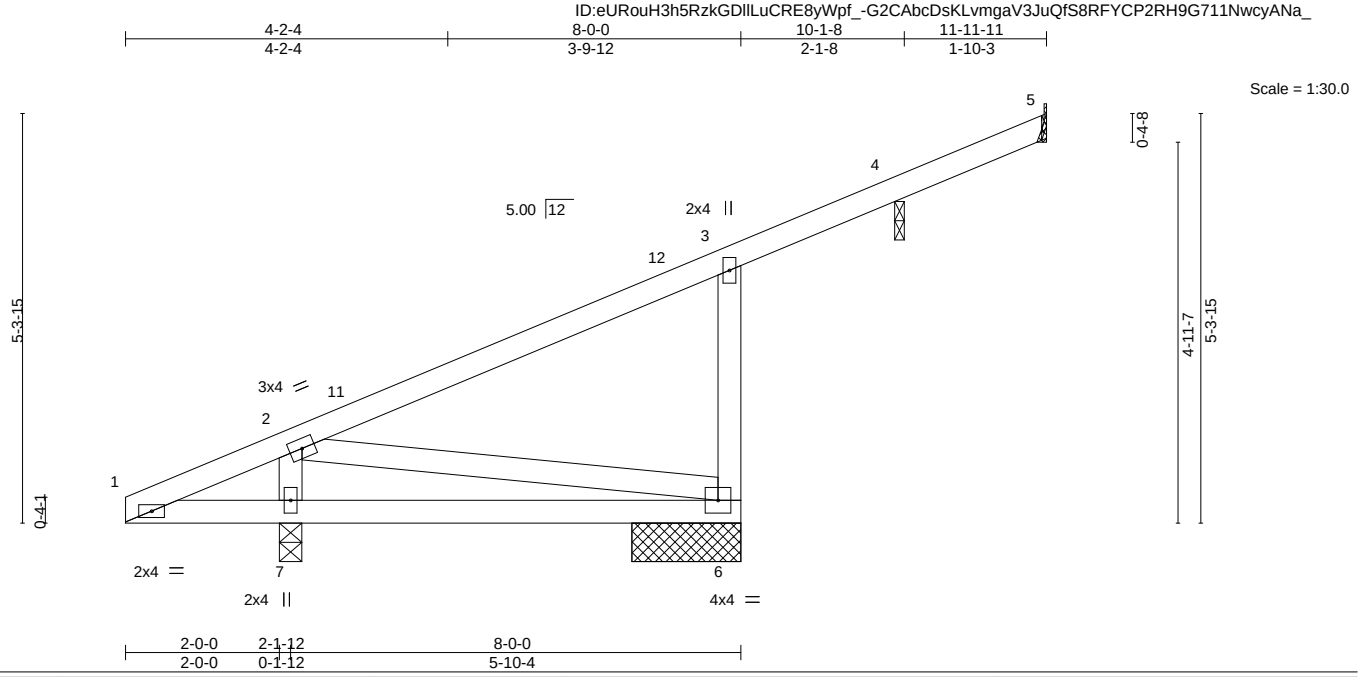

LOADING (psf)		SPACING-	2-0-0	CSI.		DEFL.	in	(loc)	l/defl	L/d	PLATES	GRIP
TCLL	30.0	Plate Grip DOL	1.15	TC	0.28	Vert(LL)	-0.03	6-7	>999	240	MT20	220/195
(Roof Snow=30.0)		Lumber DOL	1.15	BC	0.17	Vert(CT)	-0.08	6-7	>845	180		
TCDL	14.0	Rep Stress Incr	YES	WB	0.07	Horz(CT)	-0.00	5	n/a	n/a		
BCLL	0.0 *	Code	IBC2015/TPI2014	Matrix-MP		Wind(LL)	0.05	6-7	>999	360	Weight: 42 lb	FT = 20%
BCDL	10.0											

LUMBER-

TOP CHORD	2x4 DF No.1&Btr G
BOT CHORD	2x4 DF No.1&Btr G
WEBS	2x4 DF Std G

BRACING-

TOP CHORD	Structural wood sheathing directly applied or 6-0-0 oc purlins, except end verticals.
BOT CHORD	Rigid ceiling directly applied or 10-0-0 oc bracing.

REACTIONS. All bearings Mechanical except (jt=length) 6=1-5-0, 7=0-3-8, 4=0-1-8.
(lb) - Max Horz 7=129(LC 14)
Max Uplift All uplift 100 lb or less at joint(s) 5, 6, 7, 4
Max Grav All reactions 250 lb or less at joint(s) 5, 4 except 6=541(LC 21), 7=549(LC 1)

FORCES. (lb) - Max. Comp./Max. Ten. - All forces 250 (lb) or less except when shown.
TOP CHORD 3-6=-491/115
WEBS 2-7=-455/43

NOTES-

1) Wind: ASCE 7-10; Vult=110mph (3-second gust) Vasd=87mph; TCDL=7.2psf; BCDL=4.2psf; h=25ft; Cat. II; Exp C; Enclosed; MWFRS (envelope) and C-C Exterior(2) 0-0-0 to 3-0-0, Interior(1) 3-0-0 to 11-10-15 zone; cantilever left and right exposed ; porch left and right exposed;C-C for members and forces & MWFRS for reactions shown; Lumber DOL=1.33 plate grip DOL=1.33
2) TCLL: ASCE 7-10; Pf=30.0 psf (flat roof snow); Category II; Exp C; Partially Exp.; Ct=1.00
3) Unbalanced snow loads have been considered for this design.
4) This truss has been designed for a 10.0 psf bottom chord live load nonconcurrent with any other live loads.
5) * This truss has been designed for a live load of 20.0psf on the bottom chord in all areas where a rectangle 3-6-0 tall by 2-0-0 wide will fit between the bottom chord and any other members.
6) A plate rating reduction of 20% has been applied for the green lumber members.
7) Refer to girder(s) for truss to truss connections.
8) Provide mechanical connection (by others) of truss to bearing plate at joint(s) 4.
9) Provide mechanical connection (by others) of truss to bearing plate capable of withstanding 100 lb uplift at joint(s) 5, 6, 7, 4.
10) Beveled plate or shim required to provide full bearing surface with truss chord at joint(s) 4.
11) This truss is designed for a creep factor of 3.01, which is used to calculate the Vert(CT) deflection per ANSI/TPI 1.

December 11,2019

WARNING - Verify design parameters and READ NOTES ON THIS AND INCLUDED MITEK REFERENCE PAGE MII-7473 rev. 10/03/2015 BEFORE USE.
Design valid for use only with MiTek® connectors. This design is based only upon parameters shown, and is for an individual building component, not a truss system. Before use, the building designer must verify the applicability of design parameters and properly incorporate this design into the overall building design. Bracing indicated is to prevent buckling of individual truss web and/or chord members only. Additional temporary and permanent bracing is always required for stability and to prevent collapse with possible personal injury and property damage. For general guidance regarding the fabrication, storage, delivery, erection and bracing of trusses and truss systems, see ***ANSI/TPI1 Quality Criteria, DSB-89 and BCSI Building Component Safety Information*** available from Truss Plate Institute, 218 N. Lee Street, Suite 312, Alexandria, VA 22314.

MiTek USA, Inc.
400 Sunrise Avenue, Suite 270
Roseville, CA 95661

Job	Truss	Truss Type	Qty	Ply	ESPINOZA R60548688
J19-319	JC7	Jack-Closed	1	1	Job Reference (optional)

Stockton Truss, STOCKTON, CA 95215 8.330 s Dec 5 2019 MiTek Industries, Inc. Tue Dec 10 11:44:32 2019 Page 1
ID:eURouH3h5RzkGDllLuCRE8yWpf_-kEmYpxEV5f1dHk4Ftbxu?MzQ5cn1AkWQMhnwR2yANZz

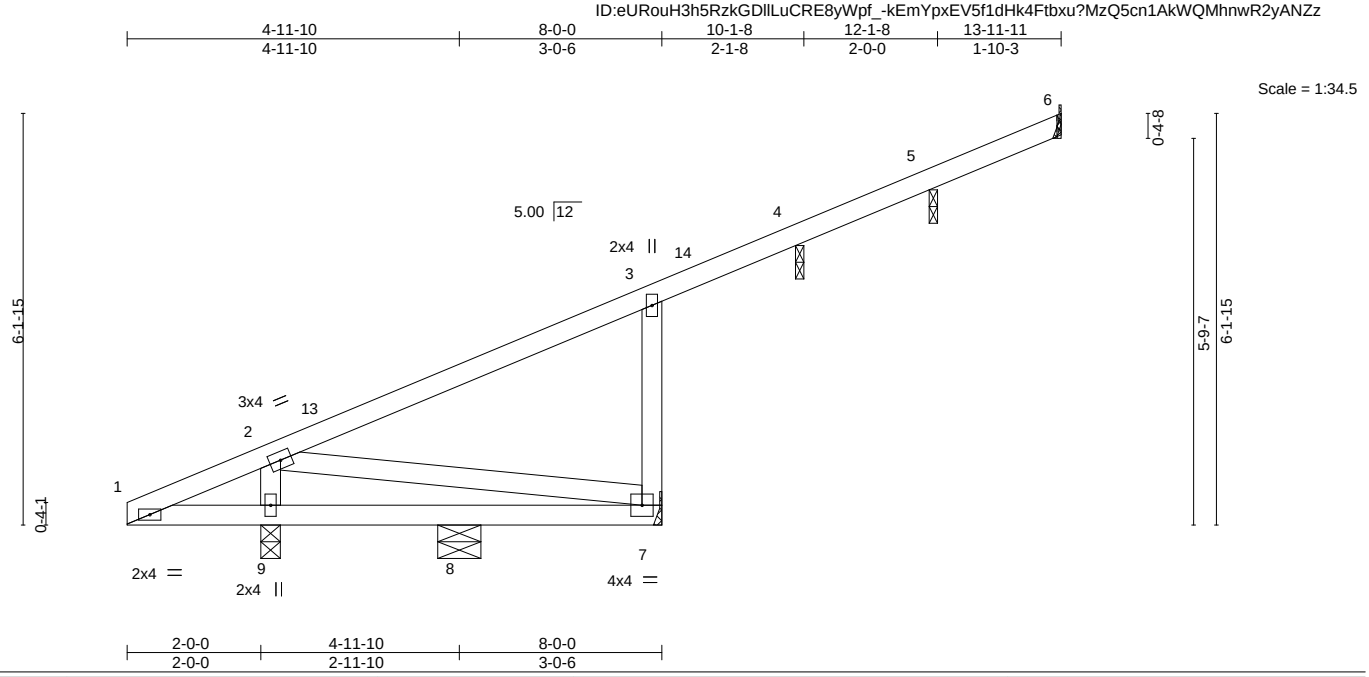

LOADING (psf)		SPACING-	2-0-0	CSI.		DEFL.	in	(loc)	l/defl	L/d	PLATES	GRIP
TCLL	30.0	Plate Grip DOL	1.15	TC	0.30	Vert(LL)	-0.00	7-8	>999	240	MT20	220/195
(Roof Snow=30.0)		Lumber DOL	1.15	BC	0.06	Vert(CT)	-0.00	7-8	>999	180		
TCDL	14.0	Rep Stress Incr	YES	WB	0.06	Horz(CT)	-0.00	6	n/a	n/a		
BCLL	0.0 *	Code	IBC2015/TPI2014	Matrix-MP		Wind(LL)	0.00	8-9	>999	360	Weight: 45 lb	FT = 20%
BCDL	10.0											

LUMBER-
TOP CHORD 2x4 DF No.1&Btr G
BOT CHORD 2x4 DF No.1&Btr G
WEBS 2x4 DF Std G

BRACING-
TOP CHORD Structural wood sheathing directly applied or 6-0-0 oc purlins, except end verticals.
BOT CHORD Rigid ceiling directly applied or 6-0-0 oc bracing.

REACTIONS. All bearings Mechanical except (jt=length) 9=0-3-8, 4=0-1-8, 5=0-1-8, 8=0-7-12.
(lb) - Max Horz 9=151(LC 14)
Max Uplift All uplift 100 lb or less at joint(s) 6, 7, 9, 4, 5, 8
Max Grav All reactions 250 lb or less at joint(s) 6, 4, 5, 8 except 7=467(LC 21), 9=514(LC 1)

FORCES. (lb) - Max. Comp./Max. Ten. - All forces 250 (lb) or less except when shown.
TOP CHORD 3-7=-451/110
WEBS 2-9=-507/122

NOTES-
1) Wind: ASCE 7-10; Vult=110mph (3-second gust) Vasd=87mph; TCDL=7.2psf; BCDL=4.2psf; h=25ft; Cat. II; Exp C; Enclosed; MWFRS (envelope) and C-C Exterior(2) 0-0-0 to 3-0-0, Interior(1) 3-0-0 to 13-10-15 zone; cantilever left and right exposed ; porch left and right exposed;C-C for members and forces & MWFRS for reactions shown; Lumber DOL=1.33 plate grip DOL=1.33
2) TCLL: ASCE 7-10; Pf=30.0 psf (flat roof snow); Category II; Exp C; Partially Exp.; Ct=1.00
3) Unbalanced snow loads have been considered for this design.
4) This truss has been designed for a 10.0 psf bottom chord live load nonconcurrent with any other live loads.
5) * This truss has been designed for a live load of 20.0psf on the bottom chord in all areas where a rectangle 3-6-0 tall by 2-0-0 wide will fit between the bottom chord and any other members.
6) A plate rating reduction of 20% has been applied for the green lumber members.
7) Refer to girder(s) for truss to truss connections.
8) Provide mechanical connection (by others) of truss to bearing plate at joint(s) 4, 5.
9) Provide mechanical connection (by others) of truss to bearing plate capable of withstanding 100 lb uplift at joint(s) 6, 7, 9, 4, 5, 8.
10) Beveled plate or shim required to provide full bearing surface with truss chord at joint(s) 4, 5.
11) This truss is designed for a creep factor of 3.01, which is used to calculate the Vert(CT) deflection per ANSI/TPI 1.

December 11,2019

WARNING - Verify design parameters and READ NOTES ON THIS AND INCLUDED MITEK REFERENCE PAGE MII-7473 rev. 10/03/2015 BEFORE USE.
Design valid for use only with MiTek® connectors. This design is based only upon parameters shown, and is for an individual building component, not a truss system. Before use, the building designer must verify the applicability of design parameters and properly incorporate this design into the overall building design. Bracing indicated is to prevent buckling of individual truss web and/or chord members only. Additional temporary and permanent bracing is always required for stability and to prevent collapse with possible personal injury and property damage. For general guidance regarding the fabrication, storage, delivery, erection and bracing of trusses and truss systems, see ***ANSI/TPI1 Quality Criteria, DSB-89 and BCSI Building Component Safety Information*** available from Truss Plate Institute, 218 N. Lee Street, Suite 312, Alexandria, VA 22314.

MiTek USA, Inc.
400 Sunrise Avenue, Suite 270
Roseville, CA 95661

Job	Truss	Truss Type	Qty	Ply	ESPINOZA R60548689
J19-319	JC8	Jack-Closed	2	1	Job Reference (optional)

Stockton Truss, STOCKTON, CA 95215 8.330 s Dec 5 2019 MiTek Industries, Inc. Tue Dec 10 11:44:33 2019 Page 1

ID:eURouH3h5RzkGDllLuCRE8yWpf_-CQKx0HF7sy9UvueRRJT7XZWbl05FvBjZbLWTzUyANZy

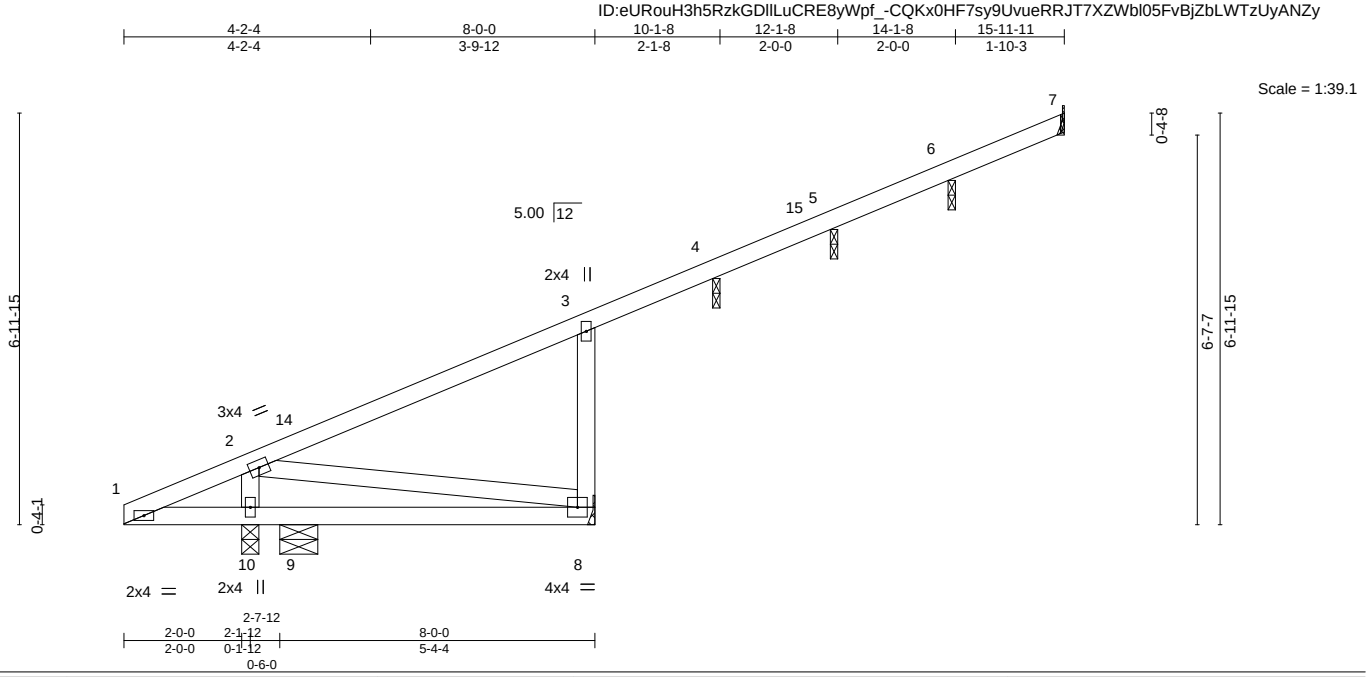

LOADING (psf)		SPACING-	2-0-0	CSI.		DEFL.	in	(loc)	l/defl	L/d	PLATES	GRIP
TCLL	30.0	Plate Grip DOL	1.15	TC	0.30	Vert(LL)	-0.01	8-9	>999	240	MT20	220/195
(Roof Snow=30.0)		Lumber DOL	1.15	BC	0.12	Vert(CT)	-0.04	8-9	>999	180		
TCDL	14.0	Rep Stress Incr	YES	WB	0.06	Horz(CT)	-0.00	7	n/a	n/a		
BCLL	0.0 *	Code	IBC2015/TPI2014	Matrix-MP		Wind(LL)	-0.00	9	>999	360	Weight: 48 lb	FT = 20%
BCDL	10.0											

LUMBER-

TOP CHORD	2x4 DF No.1&Btr G
BOT CHORD	2x4 DF No.1&Btr G
WEBS	2x4 DF Std G

BRACING-

TOP CHORD	Structural wood sheathing directly applied or 6-0-0 oc purlins, except end verticals.
BOT CHORD	Rigid ceiling directly applied or 6-0-0 oc bracing.

REACTIONS. All bearings 0-1-8 except (jt=length) 7=Mechanical, 8=Mechanical, 10=0-3-8, 9=0-7-12.
(lb) - Max Horz 10=172(LC 14)
Max Uplift All uplift 100 lb or less at joint(s) 7, 8, 10, 4, 5, 6
Max Grav All reactions 250 lb or less at joint(s) 7, 4, 5, 6 except 8=461(LC 1), 10=422(LC 1), 9=256(LC 5)

FORCES. (lb) - Max. Comp./Max. Ten. - All forces 250 (lb) or less except when shown.
TOP CHORD 3-8=-431/110
WEBS 2-10=-521/122

NOTES-

1) Wind: ASCE 7-10; Vult=110mph (3-second gust) Vasd=87mph; TCDL=7.2psf; BCDL=4.2psf; h=25ft; Cat. II; Exp C; Enclosed; MWFRS (envelope) and C-C Exterior(2) 0-0-0 to 3-0-0, Interior(1) 3-0-0 to 15-10-15 zone; cantilever left and right exposed ; porch left and right exposed;C-C for members and forces & MWFRS for reactions shown; Lumber DOL=1.33 plate grip DOL=1.33
2) TCLL: ASCE 7-10; Pf=30.0 psf (flat roof snow); Category II; Exp C; Partially Exp.; Ct=1.00
3) Unbalanced snow loads have been considered for this design.
4) This truss has been designed for a 10.0 psf bottom chord live load nonconcurrent with any other live loads.
5) * This truss has been designed for a live load of 20.0psf on the bottom chord in all areas where a rectangle 3-6-0 tall by 2-0-0 wide will fit between the bottom chord and any other members.
6) A plate rating reduction of 20% has been applied for the green lumber members.
7) Refer to girder(s) for truss to truss connections.
8) Provide mechanical connection (by others) of truss to bearing plate at joint(s) 4, 5, 6.
9) Provide mechanical connection (by others) of truss to bearing plate capable of withstanding 100 lb uplift at joint(s) 7, 8, 10, 4, 5, 6.
10) Beveled plate or shim required to provide full bearing surface with truss chord at joint(s) 4, 5, 6.
11) This truss is designed for a creep factor of 3.01, which is used to calculate the Vert(CT) deflection per ANSI/TPI 1.

December 11,2019

WARNING - Verify design parameters and READ NOTES ON THIS AND INCLUDED MITEK REFERENCE PAGE MII-7473 rev. 10/03/2015 BEFORE USE.
Design valid for use only with MiTek® connectors. This design is based only upon parameters shown, and is for an individual building component, not a truss system. Before use, the building designer must verify the applicability of design parameters and properly incorporate this design into the overall building design. Bracing indicated is to prevent buckling of individual truss web and/or chord members only. Additional temporary and permanent bracing is always required for stability and to prevent collapse with possible personal injury and property damage. For general guidance regarding the fabrication, storage, delivery, erection and bracing of trusses and truss systems, see ***ANSI/TPI1 Quality Criteria, DSB-89 and BCSI Building Component Safety Information*** available from Truss Plate Institute, 218 N. Lee Street, Suite 312, Alexandria, VA 22314.

MiTek USA, Inc.
400 Sunrise Avenue, Suite 270
Roseville, CA 95661

Job	Truss	Truss Type	Qty	Ply	ESPINOZA R60548690
J19-319	JC9	Jack-Closed	2	1	Job Reference (optional)

Stockton Truss, STOCKTON, CA 95215 8.330 s Dec 5 2019 MiTek Industries, Inc. Tue Dec 10 11:44:34 2019 Page 1

ID:eURouH3h5RzkGDllLuCRE8yWpf_-gduJEdGldGHLX2Dd?0_M4n3mtQQtedMjq?G1WwyANZx

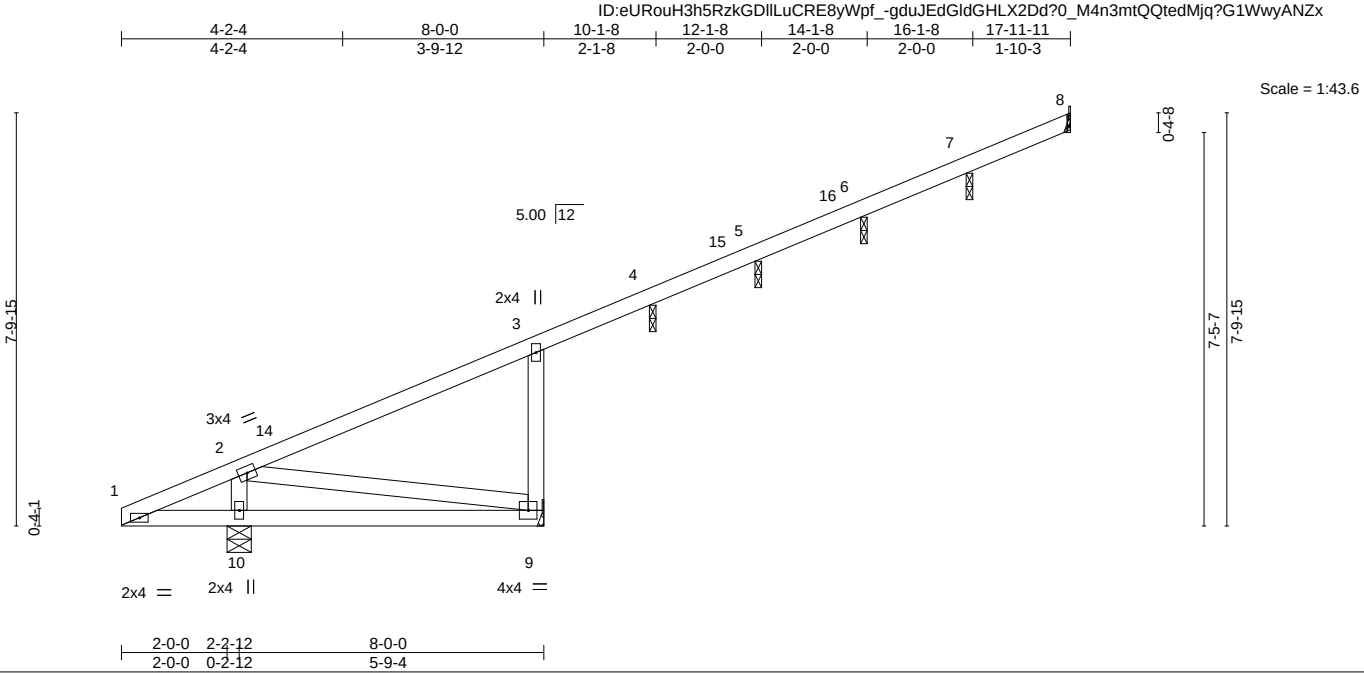

LOADING (psf)		SPACING-	2-0-0	CSI.		DEFL.	in	(loc)	l/defl	L/d	PLATES	GRIP
TCLL	30.0	Plate Grip DOL	1.15	TC	0.28	Vert(LL)	-0.02	9-10	>999	240	MT20	220/195
(Roof Snow=30.0)		Lumber DOL	1.15	BC	0.16	Vert(CT)	-0.08	9-10	>885	180		
TCDL	14.0	Rep Stress Incr	YES	WB	0.10	Horz(CT)	-0.01	8	n/a	n/a		
BCLL	0.0 *	Code	IBC2015/TPI2014	Matrix-MP		Wind(LL)	0.05	9-10	>999	360	Weight: 51 lb	FT = 20%
BCDL	10.0											

LUMBER-

TOP CHORD	2x4 DF No.1&Btr G
BOT CHORD	2x4 DF No.1&Btr G
WEBS	2x4 DF Std G

BRACING-

TOP CHORD	Structural wood sheathing directly applied or 6-0-0 oc purlins, except end verticals.
BOT CHORD	Rigid ceiling directly applied or 6-0-0 oc bracing.

REACTIONS. All bearings 0-1-8 except (jt=length) 8=Mechanical, 9=Mechanical, 10=0-5-8.
(lb) - Max Horz 10=194(LC 14)
Max Uplift All uplift 100 lb or less at joint(s) 8, 9, 10, 4, 5, 6, 7
Max Grav All reactions 250 lb or less at joint(s) 8, 4, 5, 7 except 9=473(LC 1), 10=558(LC 1), 6=253(LC 21)

FORCES. (lb) - Max. Comp./Max. Ten. - All forces 250 (lb) or less except when shown.

TOP CHORD	3-9=-428/115
BOT CHORD	9-10=-264/122
WEBS	2-9=-124/268, 2-10=-461/10

NOTES-

1) Wind: ASCE 7-10; Vult=110mph (3-second gust) Vasd=87mph; TCDL=7.2psf; BCDL=4.2psf; h=25ft; Cat. II; Exp C; Enclosed; MWFRS (envelope) and C-C Exterior(2) 0-0-0 to 3-0-0, Interior(1) 3-0-0 to 17-10-15 zone; cantilever left and right exposed ; porch left and right exposed;C-C for members and forces & MWFRS for reactions shown; Lumber DOL=1.33 plate grip DOL=1.33
2) TCLL: ASCE 7-10; Pf=30.0 psf (flat roof snow); Category II; Exp C; Partially Exp.; Ct=1.00
3) Unbalanced snow loads have been considered for this design.
4) This truss has been designed for a 10.0 psf bottom chord live load nonconcurrent with any other live loads.
5) * This truss has been designed for a live load of 20.0psf on the bottom chord in all areas where a rectangle 3-6-0 tall by 2-0-0 wide will fit between the bottom chord and any other members.
6) A plate rating reduction of 20% has been applied for the green lumber members.
7) Refer to girder(s) for truss to truss connections.
8) Provide mechanical connection (by others) of truss to bearing plate at joint(s) 4, 5, 6, 7.
9) Provide mechanical connection (by others) of truss to bearing plate capable of withstanding 100 lb uplift at joint(s) 8, 9, 10, 4, 5, 6, 7.
10) Beveled plate or shim required to provide full bearing surface with truss chord at joint(s) 4, 5, 6, 7.
11) This truss is designed for a creep factor of 3.01, which is used to calculate the Vert(CT) deflection per ANSI/TPI 1.

December 11,2019

WARNING - Verify design parameters and READ NOTES ON THIS AND INCLUDED MITEK REFERENCE PAGE MII-7473 rev. 10/03/2015 BEFORE USE.
Design valid for use only with MiTek® connectors. This design is based only upon parameters shown, and is for an individual building component, not a truss system. Before use, the building designer must verify the applicability of design parameters and properly incorporate this design into the overall building design. Bracing indicated is to prevent buckling of individual truss web and/or chord members only. Additional temporary and permanent bracing is always required for stability and to prevent collapse with possible personal injury and property damage. For general guidance regarding the fabrication, storage, delivery, erection and bracing of trusses and truss systems, see ***ANSI/TPI1 Quality Criteria, DSB-89 and BCSI Building Component Safety Information*** available from Truss Plate Institute, 218 N. Lee Street, Suite 312, Alexandria, VA 22314.

MiTek USA, Inc.
400 Sunrise Avenue, Suite 270
Roseville, CA 95661

Job	Truss	Truss Type	Qty	Ply	ESPINOZA R60548691
J19-319	JD1	Roof Special	1	1	Job Reference (optional)

Stockton Truss, STOCKTON, CA 95215 8.330 s Dec 5 2019 MiTek Industries, Inc. Tue Dec 10 11:44:35 2019 Page 1
ID:eURouH3h5RzkGDllLuCRE8yWpf_-8pShRzGNOaPC8CoqYkVbd_brGpnbN4ps2f?a2NyANZw

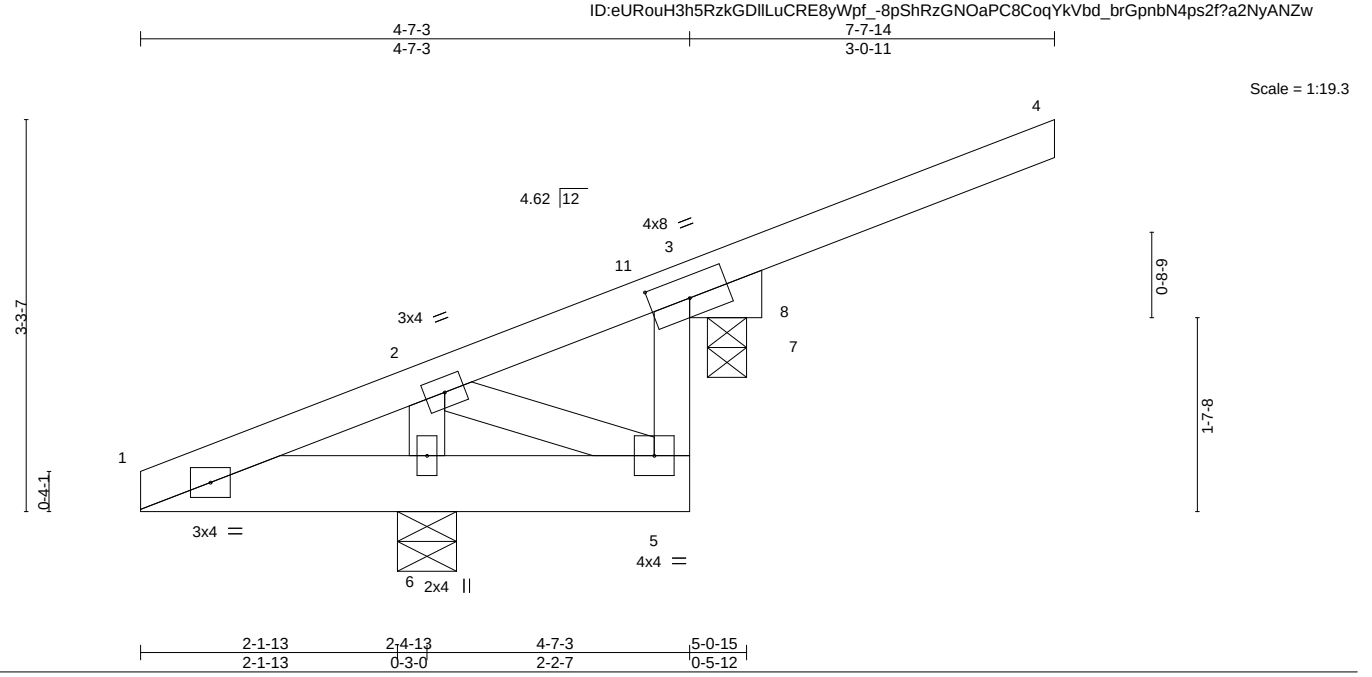

Plate Offsets (X,Y)-- [3:0-4-0,0-2-2]

LOADING (psf)		SPACING-	2-0-0	CSI.		DEFL.	in	(loc)	l/defl	L/d	PLATES	GRIP
TCLL	30.0	Plate Grip DOL	1.15	TC	0.68	Vert(LL)	0.00	5	>999	240	MT20	220/195
(Roof Snow=30.0)		Lumber DOL	1.15	BC	0.07	Vert(CT)	0.00	5	>999	180		
TCDL	14.0	Rep Stress Incr	YES	WB	0.09	Horz(CT)	-0.01	8	n/a	n/a		
BCLL	0.0 *	Code	IBC2015/TPI2014	Matrix-MP		Wind(LL)	-0.00	5	>999	360	Weight: 28 lb	FT = 20%
BCDL	10.0											

LUMBER-
TOP CHORD 2x4 DF No.1&Btr G
BOT CHORD 2x6 DF SS G *Except*
3-7: 2x8 DF SS
WEBS 2x4 DF Std G

BRACING-
TOP CHORD Structural wood sheathing directly applied or 4-7-3 oc purlins, except end verticals.
BOT CHORD Rigid ceiling directly applied or 6-0-0 oc bracing.

REACTIONS. (lb/size) 6=384/0-5-15, 8=379/0-3-15
Max Horz 6=72(LC 11)
Max Uplift 6=-49(LC 10), 8=-141(LC 11)
Max Grav 6=384(LC 1), 8=470(LC 21)

FORCES. (lb) - Max. Comp./Max. Ten. - All forces 250 (lb) or less except when shown.
TOP CHORD 1-2=-363/310, 3-8=-411/269
BOT CHORD 1-6=-281/395, 5-6=-281/169

NOTES-
1) Wind: ASCE 7-10; Vult=110mph (3-second gust) Vasd=87mph; TCDL=7.2psf; BCDL=4.2psf; h=25ft; Cat. II; Exp C; Enclosed; MWFRS (envelope) and C-C Corner(3) 0-0-0 to 4-2-15, Exterior(2) 4-2-15 to 7-7-14 zone; cantilever left and right exposed ; porch left and right exposed;C-C for members and forces & MWFRS for reactions shown; Lumber DOL=1.33 plate grip DOL=1.33
2) TCLL: ASCE 7-10; Pf=30.0 psf (flat roof snow); Category II; Exp C; Partially Exp.; Ct=1.00
3) Unbalanced snow loads have been considered for this design.
4) This truss has been designed for greater of min roof live load of 19.4 psf or 1.00 times flat roof load of 30.0 psf on overhangs non-concurrent with other live loads.
5) This truss has been designed for a 10.0 psf bottom chord live load nonconcurrent with any other live loads.
6) * This truss has been designed for a live load of 20.0psf on the bottom chord in all areas where a rectangle 3-6-0 tall by 2-0-0 wide will fit between the bottom chord and any other members.
7) A plate rating reduction of 20% has been applied for the green lumber members.
8) Bearing at joint(s) 8 considers parallel to grain value using ANSI/TPI 1 angle to grain formula. Building designer should verify capacity of bearing surface.
9) Provide mechanical connection (by others) of truss to bearing plate capable of withstanding 100 lb uplift at joint(s) 6 except (jt=lb) 8=141.
10) Graphical purlin representation does not depict the size or the orientation of the purlin along the top and/or bottom chord.
11) This truss is designed for a creep factor of 3.01, which is used to calculate the Vert(CT) deflection per ANSI/TPI 1.

December 11,2019

WARNING - Verify design parameters and READ NOTES ON THIS AND INCLUDED MITEK REFERENCE PAGE MII-7473 rev. 10/03/2015 BEFORE USE.
Design valid for use only with MiTek® connectors. This design is based only upon parameters shown, and is for an individual building component, not a truss system. Before use, the building designer must verify the applicability of design parameters and properly incorporate this design into the overall building design. Bracing indicated is to prevent buckling of individual truss web and/or chord members only. Additional temporary and permanent bracing is always required for stability and to prevent collapse with possible personal injury and property damage. For general guidance regarding the fabrication, storage, delivery, erection and bracing of trusses and truss systems, see ***ANSI/TPI1 Quality Criteria, DSB-89 and BCSI Building Component Safety Information*** available from Truss Plate Institute, 218 N. Lee Street, Suite 312, Alexandria, VA 22314.

MiTek USA, Inc.
400 Sunrise Avenue, Suite 270
Roseville, CA 95661

Job	Truss	Truss Type	Qty	Ply	ESPINOZA R60548692
J19-319	JD2	Jack-Closed	2	1	Job Reference (optional)

Stockton Truss, STOCKTON, CA 95215 8.330 s Dec 5 2019 MiTek Industries, Inc. Tue Dec 10 11:44:36 2019 Page 1
ID:eURouH3h5RzkGDllLuCRE8yWpf_-c??3eJH?9tX2mLN06R0q9C88uD6n6Xg?HJl8apyANZv

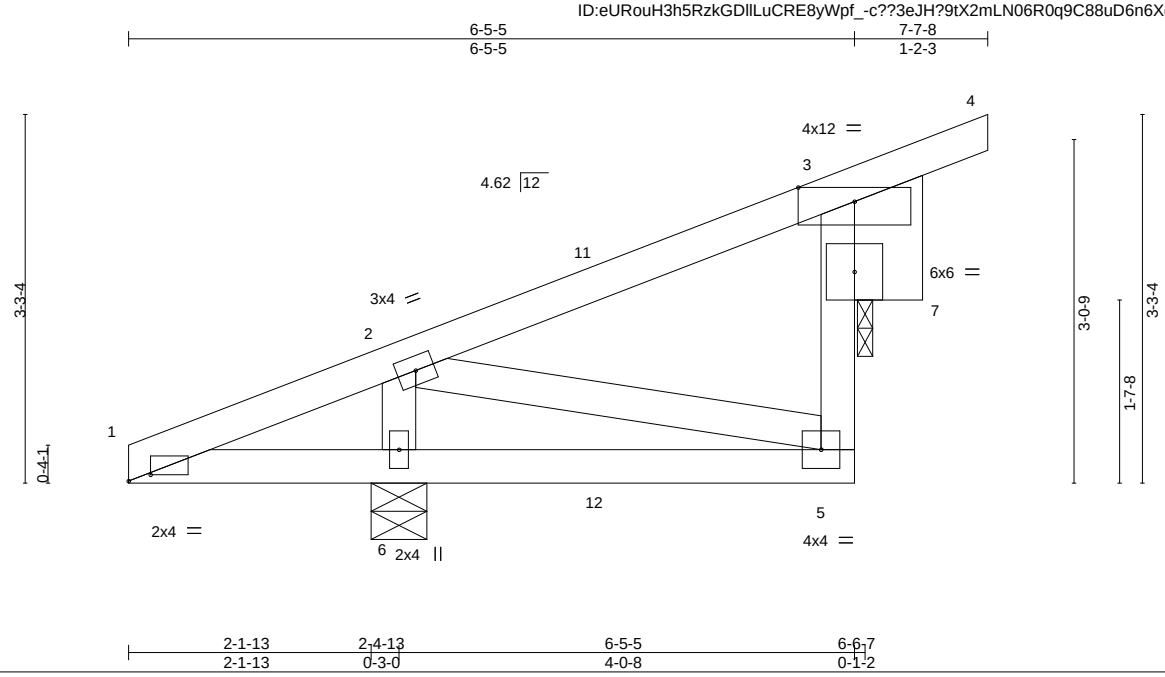

Plate Offsets (X,Y)-- [1:0-2-5,0-0-11]

LOADING (psf)		SPACING-	2-0-0	CSI.		DEFL.	in	(loc)	l/defl	L/d	PLATES	GRIP
TCLL	30.0	Plate Grip DOL	1.15	TC	0.18	Vert(LL)	-0.01	5-6	>999	240	MT20	220/195
(Roof Snow=30.0)		Lumber DOL	1.15	BC	0.14	Vert(CT)	-0.02	5-6	>999	180		
TCDL	14.0	Rep Stress Incr	YES	WB	0.11	Horz(CT)	-0.01	7	n/a	n/a		
BCLL	0.0 *	Code	IBC2015/TPI2014	Matrix-MP		Wind(LL)	0.01	5-6	>999	360	Weight: 32 lb	FT = 20%
BCDL	10.0											

LUMBER-
TOP CHORD 2x4 DF No.1&Btr G
BOT CHORD 2x4 DF No.1&Btr G
WEBS 2x4 DF Std G *Except*
3-5: 2x4 DF No.1&Btr G
OTHERS 2x8 DF SS

BRACING-
TOP CHORD Structural wood sheathing directly applied or 6-0-0 oc purlins, except end verticals.
BOT CHORD Rigid ceiling directly applied or 6-0-0 oc bracing.

REACTIONS. (lb/size) 6=529/0-5-15, 7=268/0-1-10
Max Horz 6=74(LC 14)
Max Uplift 6=-67(LC 10), 7=-85(LC 11)
Max Grav 6=535(LC 21), 7=326(LC 21)

FORCES. (lb) - Max. Comp./Max. Ten. - All forces 250 (lb) or less except when shown.
TOP CHORD 3-7=-337/181
BOT CHORD 1-6=-170/257
WEBS 2-6=-441/296

NOTES-
1) Wind: ASCE 7-10; Vult=110mph (3-second gust) Vasd=87mph; TCDL=7.2psf; BCDL=4.2psf; h=25ft; Cat. II; Exp C; Enclosed; MWFRS (envelope) and C-C Corner(3) 0-0-0 to 4-2-15, Exterior(2) 4-2-15 to 7-7-8 zone; cantilever left and right exposed ; porch left and right exposed;C-C for members and forces & MWFRS for reactions shown; Lumber DOL=1.33 plate grip DOL=1.33
2) TCLL: ASCE 7-10; Pf=30.0 psf (flat roof snow); Category II; Exp C; Partially Exp.; Ct=1.00
3) Unbalanced snow loads have been considered for this design.
4) This truss has been designed for greater of min roof live load of 19.4 psf or 1.00 times flat roof load of 30.0 psf on overhangs non-concurrent with other live loads.
5) This truss has been designed for a 10.0 psf bottom chord live load nonconcurrent with any other live loads.
6) * This truss has been designed for a live load of 20.0psf on the bottom chord in all areas where a rectangle 3-6-0 tall by 2-0-0 wide will fit between the bottom chord and any other members.
7) A plate rating reduction of 20% has been applied for the green lumber members.
8) Bearing at joint(s) 7 considers parallel to grain value using ANSI/TPI 1 angle to grain formula. Building designer should verify capacity of bearing surface.
9) Provide mechanical connection (by others) of truss to bearing plate at joint(s) 7.
10) Provide mechanical connection (by others) of truss to bearing plate capable of withstanding 100 lb uplift at joint(s) 6, 7.
11) This truss is designed for a creep factor of 3.01, which is used to calculate the Vert(CT) deflection per ANSI/TPI 1.

December 11,2019

WARNING - Verify design parameters and READ NOTES ON THIS AND INCLUDED MITEK REFERENCE PAGE MII-7473 rev. 10/03/2015 BEFORE USE.
Design valid for use only with MiTek® connectors. This design is based only upon parameters shown, and is for an individual building component, not a truss system. Before use, the building designer must verify the applicability of design parameters and properly incorporate this design into the overall building design. Bracing indicated is to prevent buckling of individual truss web and/or chord members only. Additional temporary and permanent bracing is always required for stability and to prevent collapse with possible personal injury and property damage. For general guidance regarding the fabrication, storage, delivery, erection and bracing of trusses and truss systems, see ***ANSI/TPI1 Quality Criteria, DSB-89 and BCSI Building Component Safety Information*** available from Truss Plate Institute, 218 N. Lee Street, Suite 312, Alexandria, VA 22314.

MiTek USA, Inc.
400 Sunrise Avenue, Suite 270
Roseville, CA 95661

Job	Truss	Truss Type	Qty	Ply	ESPINOZA R60548693
J19-319	JD3	Roof Special	1	1	Job Reference (optional)

Stockton Truss, STOCKTON, CA 95215 8.330 s Dec 5 2019 MiTek Industries, Inc. Tue Dec 10 11:44:37 2019 Page 1
ID:eURouH3h5RzkGDllLuCRE8yWpf_-4CZRsfIdwBfvOVyCg9X3iPhBGdUJr_k9WzUh6FyANZu

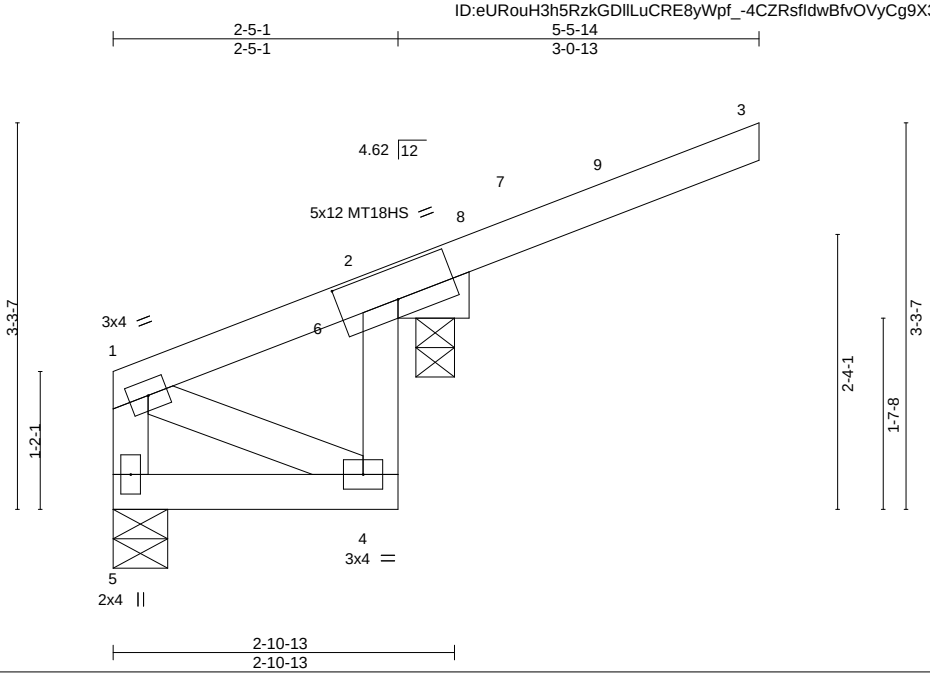

Plate Offsets (X,Y)-- [2:0-6-0,0-3-3]

LOADING (psf)		SPACING-	2-0-0	CSI.		DEFL.	in	(loc)	l/defl	L/d	PLATES	GRIP
TCLL	30.0	Plate Grip DOL	1.15	TC	0.65	Vert(LL)	0.00	4	>999	240	MT20	220/195
(Roof Snow=30.0)		Lumber DOL	1.15	BC	0.05	Vert(CT)	0.01	4	>999	180	MT18HS	220/195
TCDL	14.0	Rep Stress Incr	YES	WB	0.13	Horz(CT)	-0.01	7	n/a	n/a		
BCLL	0.0 *	Code	IBC2015/TPI2014	Matrix-MP		Wind(LL)	0.00	4-5	>999	360	Weight: 18 lb	FT = 20%
BCDL	10.0											

LUMBER-
TOP CHORD 2x4 DF No.1&Btr G
BOT CHORD 2x4 DF No.1&Btr G
WEBS 2x4 DF Std G
OTHERS 2x8 DF SS

BRACING-
TOP CHORD Structural wood sheathing directly applied or 2-5-1 oc purlins, except end verticals.
BOT CHORD Rigid ceiling directly applied or 10-0-0 oc bracing.

REACTIONS. (lb/size) 5=10/0-5-9, 7=502/0-3-15
Max Horz 5=58(LC 11)
Max Uplift 5=-65(LC 20), 7=-147(LC 11)
Max Grav 5=84(LC 22), 7=513(LC 21)

FORCES. (lb) - Max. Comp./Max. Ten. - All forces 250 (lb) or less except when shown.

NOTES-
1) Wind: ASCE 7-10; Vult=110mph (3-second gust) Vasd=87mph; TCDL=7.2psf; BCDL=4.2psf; h=25ft; Cat. II; Exp C; Enclosed; MWFRS (envelope) and C-C Corner(3) 0-1-12 to 4-4-11, Exterior(2) 4-4-11 to 5-5-14 zone; cantilever left and right exposed ; porch left and right exposed;C-C for members and forces & MWFRS for reactions shown; Lumber DOL=1.33 plate grip DOL=1.33
2) TCLL: ASCE 7-10; Pf=30.0 psf (flat roof snow); Category II; Exp C; Partially Exp.; Ct=1.00
3) Unbalanced snow loads have been considered for this design.
4) This truss has been designed for greater of min roof live load of 19.4 psf or 1.00 times flat roof load of 30.0 psf on overhangs non-concurrent with other live loads.
5) All plates are MT20 plates unless otherwise indicated.
6) This truss has been designed for a 10.0 psf bottom chord live load nonconcurrent with any other live loads.
7) * This truss has been designed for a live load of 20.0psf on the bottom chord in all areas where a rectangle 3-6-0 tall by 2-0-0 wide will fit between the bottom chord and any other members.
8) A plate rating reduction of 20% has been applied for the green lumber members.
9) Bearing at joint(s) 7 considers parallel to grain value using ANSI/TPI 1 angle to grain formula. Building designer should verify capacity of bearing surface.
10) Provide mechanical connection (by others) of truss to bearing plate capable of withstanding 100 lb uplift at joint(s) 5 except (jt=lb) 7=147.
11) Hanger(s) or other connection device(s) shall be provided sufficient to support concentrated load(s) 2 lb down and 30 lb up at 5-5-14 on top chord. The design/selection of such connection device(s) is the responsibility of others.
12) This truss is designed for a creep factor of 3.01, which is used to calculate the Vert(CT) deflection per ANSI/TPI 1.
13) In the LOAD CASE(S) section, loads applied to the face of the truss are noted as front (F) or back (B).

LOAD CASE(S) Standard
1) Dead + Snow (balanced): Lumber Increase=1.15, Plate Increase=1.15
Uniform Loads (plf)
Vert: 1-2=-88, 2-3=-88, 4-5=-20

December 11,2019

WARNING - Verify design parameters and READ NOTES ON THIS AND INCLUDED MITEK REFERENCE PAGE MII-7473 rev. 10/03/2015 BEFORE USE.
Design valid for use only with MiTek® connectors. This design is based only upon parameters shown, and is for an individual building component, not a truss system. Before use, the building designer must verify the applicability of design parameters and properly incorporate this design into the overall building design. Bracing indicated is to prevent buckling of individual truss web and/or chord members only. Additional temporary and permanent bracing is always required for stability and to prevent collapse with possible personal injury and property damage. For general guidance regarding the fabrication, storage, delivery, erection and bracing of trusses and truss systems, see ***ANSI/TPI1 Quality Criteria, DSB-89 and BCSI Building Component Safety Information*** available from Truss Plate Institute, 218 N. Lee Street, Suite 312, Alexandria, VA 22314.

MiTek USA, Inc.
400 Sunrise Avenue, Suite 270
Roseville, CA 95661

Job	Truss	Truss Type	Qty	Ply	ESPINOZA R60548694
J19-319	JD4	Jack-Closed	2	1	Job Reference (optional)

Stockton Truss, STOCKTON, CA 95215 8.330 s Dec 5 2019 MiTek Industries, Inc. Tue Dec 10 11:44:38 2019 Page 1
ID:eURouH3h5RzkGDllLuCRE8yWpf_-YO7q3?JFhVnm?fXPEs2IEdDUC1pDaRjlkdEEfiyANZt

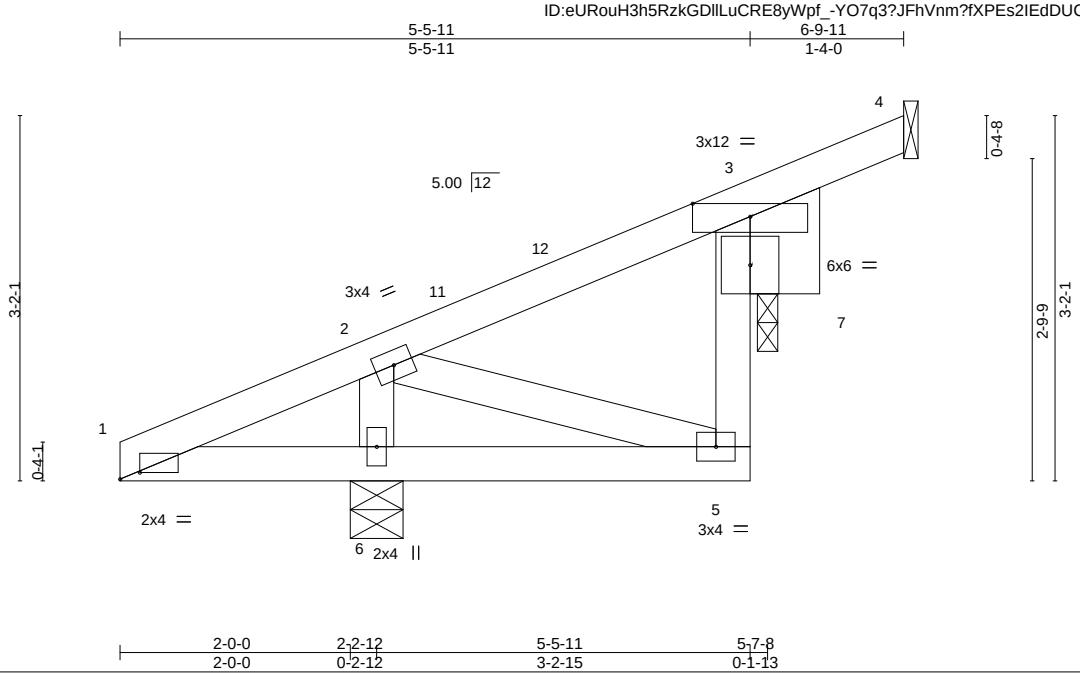

Plate Offsets (X,Y)-- [1:0-2-1,0-0-11]

LOADING (psf)		SPACING-	2-0-0	CSI.		DEFL.	in	(loc)	l/defl	L/d	PLATES	GRIP
TCLL	30.0	Plate Grip DOL	1.15	TC	0.13	Vert(LL)	-0.00	5-6	>999	240	MT20	220/195
(Roof Snow=30.0)		Lumber DOL	1.15	BC	0.07	Vert(CT)	-0.01	5-6	>999	180		
TCDL	14.0	Rep Stress Incr	YES	WB	0.08	Horz(CT)	-0.00	4	n/a	n/a		
BCLL	0.0 *	Code IBC2015/TPI2014		Matrix-MP		Wind(LL)	0.00	5-6	>999	360	Weight: 28 lb	FT = 20%
BCDL	10.0											

LUMBER-
TOP CHORD 2x4 DF No.1&Btr G
BOT CHORD 2x4 DF No.1&Btr G
WEBS 2x4 DF Std G
OTHERS 2x8 DF SS

BRACING-
TOP CHORD Structural wood sheathing directly applied or 5-5-11 oc purlins, except end verticals.
BOT CHORD Rigid ceiling directly applied or 6-0-0 oc bracing.

REACTIONS. (lb/size) 4=28/Mechanical, 6=479/0-5-8, 7=193/0-2-2
Max Horz 6=73(LC 14)
Max Uplift 4=-5(LC 14), 6=-39(LC 10), 7=-56(LC 11)
Max Grav 4=36(LC 21), 6=483(LC 21), 7=231(LC 21)

FORCES. (lb) - Max. Comp./Max. Ten. - All forces 250 (lb) or less except when shown.
TOP CHORD 3-7=-252/57
WEBS 2-6=-395/154

NOTES-
1) Wind: ASCE 7-10; Vult=110mph (3-second gust) Vasd=87mph; TCDL=7.2psf; BCDL=4.2psf; h=25ft; Cat. II; Exp C; Enclosed; MWFRS (envelope) and C-C Exterior(2) 0-0-0 to 3-0-0, Interior(1) 3-0-0 to 6-8-15 zone; cantilever left and right exposed ; porch left and right exposed;C-C for members and forces & MWFRS for reactions shown; Lumber DOL=1.33 plate grip DOL=1.33
2) TCLL: ASCE 7-10; Pf=30.0 psf (flat roof snow); Category II; Exp C; Partially Exp.; Ct=1.00
3) Unbalanced snow loads have been considered for this design.
4) This truss has been designed for a 10.0 psf bottom chord live load nonconcurrent with any other live loads.
5) * This truss has been designed for a live load of 20.0psf on the bottom chord in all areas where a rectangle 3-6-0 tall by 2-0-0 wide will fit between the bottom chord and any other members.
6) A plate rating reduction of 20% has been applied for the green lumber members.
7) Refer to girder(s) for truss to truss connections.
8) Bearing at joint(s) 7 considers parallel to grain value using ANSI/TPI 1 angle to grain formula. Building designer should verify capacity of bearing surface.
9) Provide mechanical connection (by others) of truss to bearing plate at joint(s) 7.
10) Provide mechanical connection (by others) of truss to bearing plate capable of withstanding 100 lb uplift at joint(s) 4, 6, 7.
11) This truss is designed for a creep factor of 3.01, which is used to calculate the Vert(CT) deflection per ANSI/TPI 1.

December 11,2019

WARNING - Verify design parameters and READ NOTES ON THIS AND INCLUDED MITEK REFERENCE PAGE MII-7473 rev. 10/03/2015 BEFORE USE.
Design valid for use only with MiTek® connectors. This design is based only upon parameters shown, and is for an individual building component, not a truss system. Before use, the building designer must verify the applicability of design parameters and properly incorporate this design into the overall building design. Bracing indicated is to prevent buckling of individual truss web and/or chord members only. Additional temporary and permanent bracing is always required for stability and to prevent collapse with possible personal injury and property damage. For general guidance regarding the fabrication, storage, delivery, erection and bracing of trusses and truss systems, see ***ANSI/TPI1 Quality Criteria, DSB-89 and BCSI Building Component Safety Information*** available from Truss Plate Institute, 218 N. Lee Street, Suite 312, Alexandria, VA 22314.

MiTek USA, Inc.
400 Sunrise Avenue, Suite 270
Roseville, CA 95661

Job	Truss	Truss Type	Qty	Ply	ESPINOZA R60548695
J19-319	JD5	Jack-Closed	1	1	Job Reference (optional)

Stockton Truss, STOCKTON, CA 95215 8.330 s Dec 5 2019 MiTek Industries, Inc. Tue Dec 10 11:44:39 2019 Page 1
ID:eURouH3h5RzkGDllLuCRE8yWpf_-1ahCHLJuSovddp6bnZZXnqmfdR8GJuzSzHzoB8yANZs

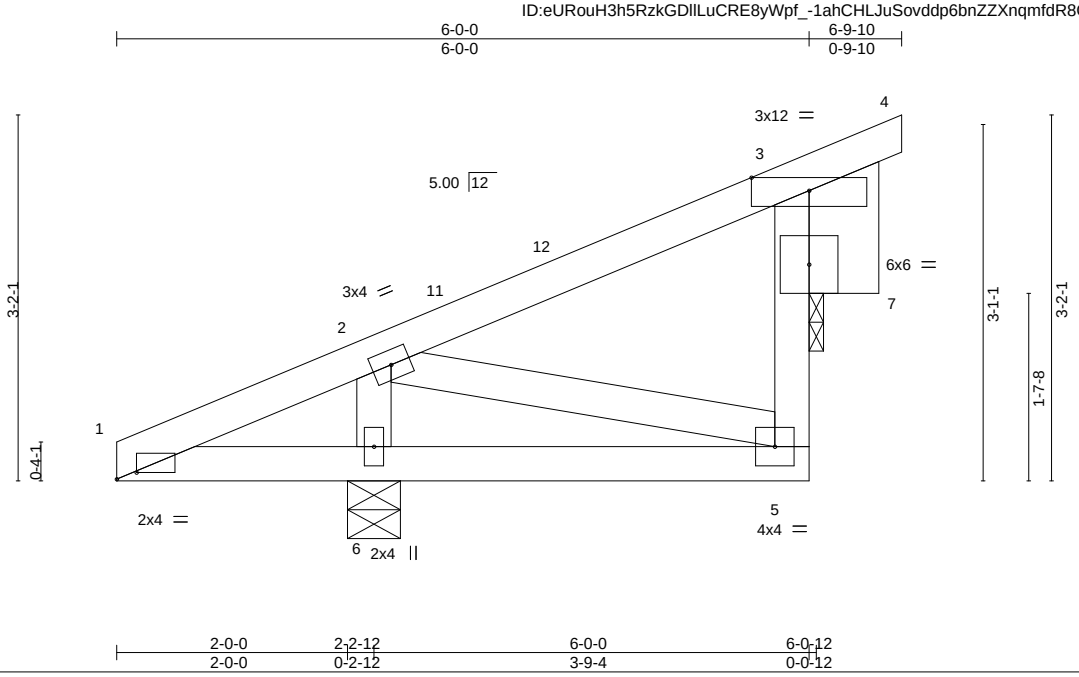

Plate Offsets (X,Y)-- [1:0-2-1,0-0-11]

LOADING (psf)		SPACING-	2-0-0	CSI.		DEFL.	in	(loc)	l/defl	L/d	PLATES	GRIP
TCLL	30.0	Plate Grip DOL	1.15	TC	0.15	Vert(LL)	-0.00	5-6	>999	240	MT20	220/195
(Roof Snow=30.0)		Lumber DOL	1.15	BC	0.09	Vert(CT)	-0.01	5-6	>999	180		
TCDL	14.0	Rep Stress Incr	YES	WB	0.08	Horz(CT)	-0.00	7	n/a	n/a		
BCLL	0.0 *	Code IBC2015/TPI2014		Matrix-MP		Wind(LL)	0.01	5-6	>999	360	Weight: 31 lb	FT = 20%
BCDL	10.0											

LUMBER-
TOP CHORD 2x4 DF No.1&Btr G
BOT CHORD 2x4 DF No.1&Btr G
WEBS 2x4 DF Std G
OTHERS 2x8 DF SS

BRACING-
TOP CHORD Structural wood sheathing directly applied or 6-0-0 oc purlins, except end verticals.
BOT CHORD Rigid ceiling directly applied or 6-0-0 oc bracing.

REACTIONS. (lb/size) 6=499/0-5-8, 7=216/0-1-8
Max Horz 6=72(LC 14)
Max Uplift 6=-46(LC 10), 7=-72(LC 11)
Max Grav 6=506(LC 21), 7=260(LC 21)

FORCES. (lb) - Max. Comp./Max. Ten. - All forces 250 (lb) or less except when shown.
TOP CHORD 3-7=-278/104
WEBS 2-6=-415/131

NOTES-
1) Wind: ASCE 7-10; Vult=110mph (3-second gust) Vasd=87mph; TCDL=7.2psf; BCDL=4.2psf; h=25ft; Cat. II; Exp C; Enclosed; MWFRS (envelope) and C-C Exterior(2) 0-0-0 to 3-0-0, Interior(1) 3-0-0 to 6-9-10 zone; cantilever left and right exposed ; porch left and right exposed;C-C for members and forces & MWFRS for reactions shown; Lumber DOL=1.33 plate grip DOL=1.33
2) TCLL: ASCE 7-10; Pf=30.0 psf (flat roof snow); Category II; Exp C; Partially Exp.; Ct=1.00
3) Unbalanced snow loads have been considered for this design.
4) This truss has been designed for greater of min roof live load of 19.0 psf or 1.00 times flat roof load of 30.0 psf on overhangs non-concurrent with other live loads.
5) This truss has been designed for a 10.0 psf bottom chord live load nonconcurrent with any other live loads.
6) * This truss has been designed for a live load of 20.0psf on the bottom chord in all areas where a rectangle 3-6-0 tall by 2-0-0 wide will fit between the bottom chord and any other members.
7) A plate rating reduction of 20% has been applied for the green lumber members.
8) Bearing at joint(s) 7 considers parallel to grain value using ANSI/TPI 1 angle to grain formula. Building designer should verify capacity of bearing surface.
9) Provide mechanical connection (by others) of truss to bearing plate at joint(s) 7.
10) Provide mechanical connection (by others) of truss to bearing plate capable of withstanding 100 lb uplift at joint(s) 6, 7.
11) This truss is designed for a creep factor of 3.01, which is used to calculate the Vert(CT) deflection per ANSI/TPI 1.

December 11,2019

WARNING - Verify design parameters and READ NOTES ON THIS AND INCLUDED MITEK REFERENCE PAGE MII-7473 rev. 10/03/2015 BEFORE USE.
Design valid for use only with MiTek® connectors. This design is based only upon parameters shown, and is for an individual building component, not a truss system. Before use, the building designer must verify the applicability of design parameters and properly incorporate this design into the overall building design. Bracing indicated is to prevent buckling of individual truss web and/or chord members only. Additional temporary and permanent bracing is always required for stability and to prevent collapse with possible personal injury and property damage. For general guidance regarding the fabrication, storage, delivery, erection and bracing of trusses and truss systems, see ***ANSI/TPI1 Quality Criteria, DSB-89 and BCSI Building Component Safety Information*** available from Truss Plate Institute, 218 N. Lee Street, Suite 312, Alexandria, VA 22314.

MiTek USA, Inc.
400 Sunrise Avenue, Suite 270
Roseville, CA 95661

Job	Truss	Truss Type	Qty	Ply	ESPINOZA R60548696
J19-319	JF10	Jack-Closed	1	1	Job Reference (optional)

Stockton Truss, STOCKTON, CA 95215 8.330 s Dec 5 2019 MiTek Industries, Inc. Tue Dec 10 11:44:39 2019 Page 1
ID:eURouH3h5RzkGDllLuCRE8yWpf_-1ahCHLJuSovddp6bnZZXnqmbKR5pJvESzHzoB8yANZs

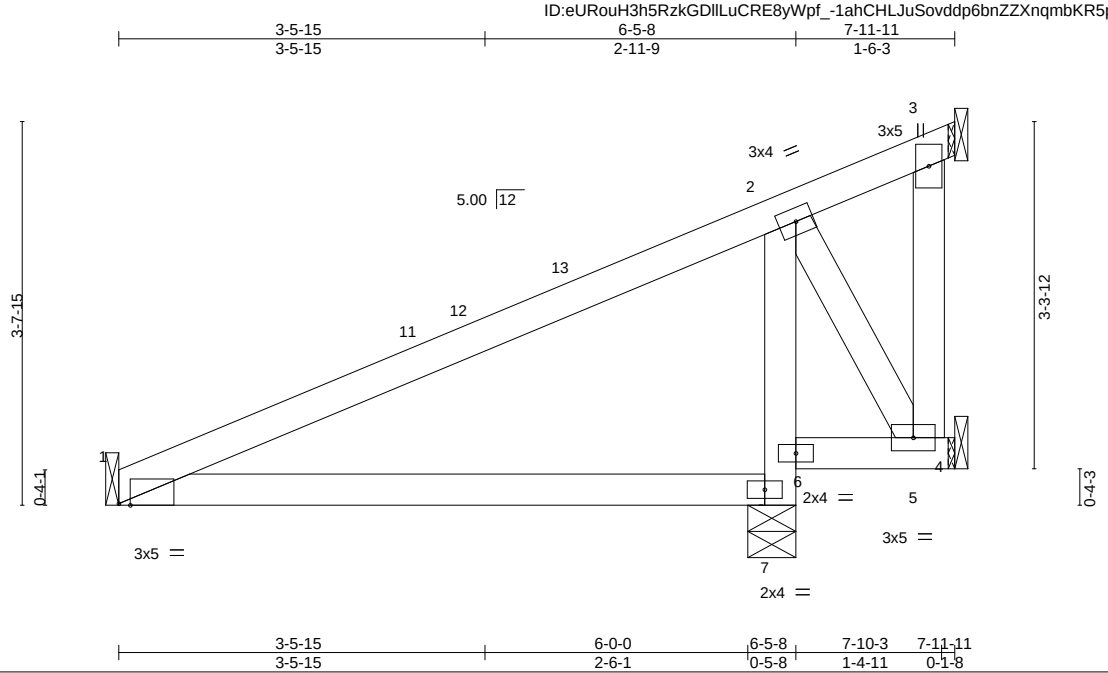

Plate Offsets (X,Y)-- [1:0-1-5,Edge]

LOADING (psf)		SPACING-	2-0-0	CSI.		DEFL.	in	(loc)	l/defl	L/d	PLATES	GRIP
TCLL	30.0	Plate Grip DOL	1.15	TC	0.42	Vert(LL)	-0.06	7-10	>999	240	MT20	220/195
(Roof Snow=30.0)		Lumber DOL	1.15	BC	0.31	Vert(CT)	-0.20	7-10	>378	180		
TCDL	14.0	Rep Stress Incr	YES	WB	0.06	Horz(CT)	0.00	5	n/a	n/a		
BCLL	0.0 *	Code	IBC2015/TPI2014	Matrix-MP		Wind(LL)	0.11	7-10	>691	360	Weight: 33 lb	FT = 20%
BCDL	10.0											

LUMBER-
TOP CHORD 2x4 DF No.1&Btr G
BOT CHORD 2x4 DF No.1&Btr G
WEBS 2x4 DF Std G

BRACING-
TOP CHORD Structural wood sheathing directly applied or 6-0-0 oc purlins, except end verticals.
BOT CHORD Rigid ceiling directly applied or 10-0-0 oc bracing, Except: 6-0-0 oc bracing: 6-7.

REACTIONS. All bearings Mechanical except (jt=length) 7=0-5-8.
(lb) - Max Horz 7=84(LC 14)
Max Uplift All uplift 100 lb or less at joint(s) 1, 7, 5 except 3=-155(LC 1)
Max Grav All reactions 250 lb or less at joint(s) 5, 3 except 1=332(LC 20), 7=540(LC 20)

FORCES. (lb) - Max. Comp./Max. Ten. - All forces 250 (lb) or less except when shown.
BOT CHORD 6-7=-456/142, 2-6=-442/148

NOTES-
1) Wind: ASCE 7-10; Vult=110mph (3-second gust) Vasd=87mph; TCDL=7.2psf; BCDL=4.2psf; h=25ft; Cat. II; Exp C; Enclosed; MWFRS (envelope) and C-C Exterior(2) 0-0-0 to 3-0-0, Interior(1) 3-0-0 to 7-8-12 zone; cantilever left and right exposed ; porch left and right exposed;C-C for members and forces & MWFRS for reactions shown; Lumber DOL=1.33 plate grip DOL=1.33
2) TCLL: ASCE 7-10; Pf=30.0 psf (flat roof snow); Category II; Exp C; Partially Exp.; Ct=1.00
3) Unbalanced snow loads have been considered for this design.
4) This truss has been designed for a 10.0 psf bottom chord live load nonconcurrent with any other live loads.
5) * This truss has been designed for a live load of 20.0psf on the bottom chord in all areas where a rectangle 3-6-0 tall by 2-0-0 wide will fit between the bottom chord and any other members.
6) A plate rating reduction of 20% has been applied for the green lumber members.
7) Refer to girder(s) for truss to truss connections.
8) Bearing at joint(s) 7 considers parallel to grain value using ANSI/TPI 1 angle to grain formula. Building designer should verify capacity of bearing surface.
9) Provide mechanical connection (by others) of truss to bearing plate capable of withstanding 100 lb uplift at joint(s) 1, 7, 5 except (jt=lb) 3=155.
10) Gap between inside of top chord bearing and first diagonal or vertical web shall not exceed 0.500in.
11) This truss is designed for a creep factor of 3.01, which is used to calculate the Vert(CT) deflection per ANSI/TPI 1.

REGISTERED PROFESSIONAL ENGINEER
EDUARD TEODOSESCU
C 75435
EXP. 03/31/2020
STATE OF CALIFORNIA

December 11,2019

WARNING - Verify design parameters and READ NOTES ON THIS AND INCLUDED MITEK REFERENCE PAGE MII-7473 rev. 10/03/2015 BEFORE USE.
Design valid for use only with MiTek® connectors. This design is based only upon parameters shown, and is for an individual building component, not a truss system. Before use, the building designer must verify the applicability of design parameters and properly incorporate this design into the overall building design. Bracing indicated is to prevent buckling of individual truss web and/or chord members only. Additional temporary and permanent bracing is always required for stability and to prevent collapse with possible personal injury and property damage. For general guidance regarding the fabrication, storage, delivery, erection and bracing of trusses and truss systems, see ***ANSI/TPI1 Quality Criteria, DSB-89 and BCSI Building Component Safety Information*** available from Truss Plate Institute, 218 N. Lee Street, Suite 312, Alexandria, VA 22314.

MiTek USA, Inc.
400 Sunrise Avenue, Suite 270
Roseville, CA 95661

Job	Truss	Truss Type	Qty	Ply	ESPINOZA R60548697
J19-319	JF11	Jack-Closed	1	1	Job Reference (optional)

Stockton Truss, STOCKTON, CA 95215 8.330 s Dec 5 2019 MiTek Industries, Inc. Tue Dec 10 11:44:40 2019 Page 1
ID:eURouH3h5RzkGDllLuCRE8yWpf_-VmFaUhKWD62UFzhnLH5mJ2Iq2qTF2K0bCxjLjayANZr

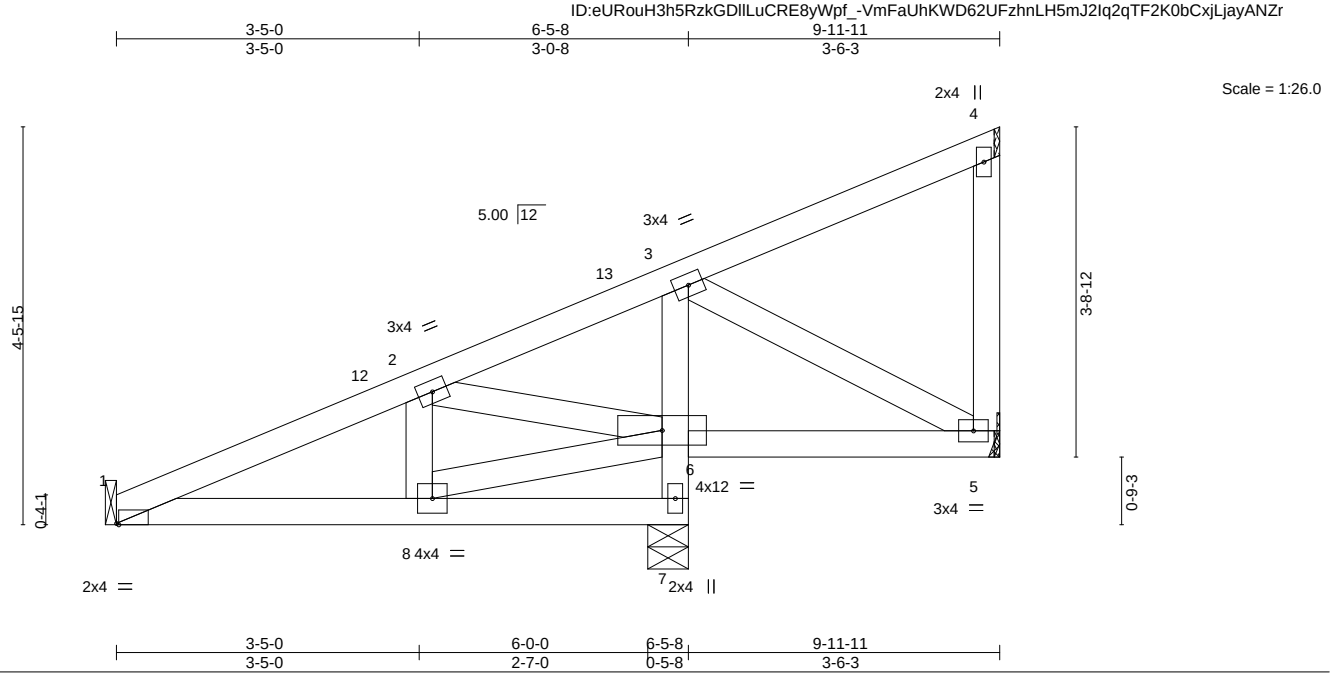

Plate Offsets (X,Y)-- [1:0-0-5,Edge]

LOADING (psf)		SPACING-	2-0-0	CSI.		DEFL.	in	(loc)	l/defl	L/d	PLATES	GRIP
TCLL	30.0	Plate Grip DOL	1.15	TC	0.17	Vert(LL)	-0.01	8-11	>999	240	MT20	220/195
(Roof Snow=30.0)		Lumber DOL	1.15	BC	0.17	Vert(CT)	-0.02	8-11	>999	180		
TCDL	14.0	Rep Stress Incr	YES	WB	0.16	Horz(CT)	-0.00	1	n/a	n/a		
BCLL	0.0 *	Code IBC2015/TPI2014		Matrix-MSH		Wind(LL)	0.01	8-11	>999	360	Weight: 50 lb	FT = 20%
BCDL	10.0											

LUMBER-
TOP CHORD 2x4 DF No.1&Btr G
BOT CHORD 2x4 DF No.1&Btr G *Except*
3-7: 2x4 DF Std G
WEBS 2x4 DF Std G

BRACING-
TOP CHORD Structural wood sheathing directly applied or 6-0-0 oc purlins, except end verticals.
BOT CHORD Rigid ceiling directly applied or 6-0-0 oc bracing.

REACTIONS. (lb/size) 1=309/Mechanical, 7=618/0-5-8, 5=134/Mechanical
Max Horz 7=106(LC 14)
Max Uplift 1=-24(LC 11), 7=-84(LC 11), 5=-33(LC 11)
Max Grav 1=311(LC 20), 7=673(LC 20), 5=179(LC 20)

FORCES. (lb) - Max. Comp./Max. Ten. - All forces 250 (lb) or less except when shown.
TOP CHORD 1-2=-413/173
BOT CHORD 1-8=-119/356, 6-7=-649/319, 3-6=-427/127
WEBS 2-6=-425/299, 6-8=-266/353

NOTES-
1) Wind: ASCE 7-10; Vult=110mph (3-second gust) Vasd=87mph; TCDL=7.2psf; BCDL=4.2psf; h=25ft; Cat. II; Exp C; Enclosed; MWFRS (envelope) and C-C Exterior(2) 0-0-0 to 3-0-0, Interior(1) 3-0-0 to 9-9-15 zone; cantilever left and right exposed ; porch left and right exposed;C-C for members and forces & MWFRS for reactions shown; Lumber DOL=1.33 plate grip DOL=1.33
2) TCLL: ASCE 7-10; Pf=30.0 psf (flat roof snow); Category II; Exp C; Partially Exp.; Ct=1.00
3) Unbalanced snow loads have been considered for this design.
4) This truss has been designed for a 10.0 psf bottom chord live load nonconcurrent with any other live loads.
5) * This truss has been designed for a live load of 20.0psf on the bottom chord in all areas where a rectangle 3-6-0 tall by 2-0-0 wide will fit between the bottom chord and any other members.
6) A plate rating reduction of 20% has been applied for the green lumber members.
7) Refer to girder(s) for truss to truss connections.
8) Refer to girder(s) for truss to truss connections.
9) Provide mechanical connection (by others) of truss to bearing plate capable of withstanding 100 lb uplift at joint(s) 1, 7, 5.
10) This truss is designed for a creep factor of 3.01, which is used to calculate the Vert(CT) deflection per ANSI/TPI 1.

December 11,2019

WARNING - Verify design parameters and READ NOTES ON THIS AND INCLUDED MITEK REFERENCE PAGE MII-7473 rev. 10/03/2015 BEFORE USE.
Design valid for use only with MiTek® connectors. This design is based only upon parameters shown, and is for an individual building component, not a truss system. Before use, the building designer must verify the applicability of design parameters and properly incorporate this design into the overall building design. Bracing indicated is to prevent buckling of individual truss web and/or chord members only. Additional temporary and permanent bracing is always required for stability and to prevent collapse with possible personal injury and property damage. For general guidance regarding the fabrication, storage, delivery, erection and bracing of trusses and truss systems, see ***ANSI/TPI1 Quality Criteria, DSB-89 and BCSI Building Component Safety Information*** available from Truss Plate Institute, 218 N. Lee Street, Suite 312, Alexandria, VA 22314.

MiTek USA, Inc.
400 Sunrise Avenue, Suite 270
Roseville, CA 95661

Job	Truss	Truss Type	Qty	Ply	ESPINOZA R60548698
J19-319	JF12	Jack-Closed	1	1	Job Reference (optional)

Stockton Truss, STOCKTON, CA 95215 8.330 s Dec 5 2019 MiTek Industries, Inc. Tue Dec 10 11:44:41 2019 Page 1
ID:eURouH3h5RzkGDllLuCRE8yWpf_-zzpyi0L8_QALs7G_v_c?sFrvBEjMngNkRbSvF0yANZq

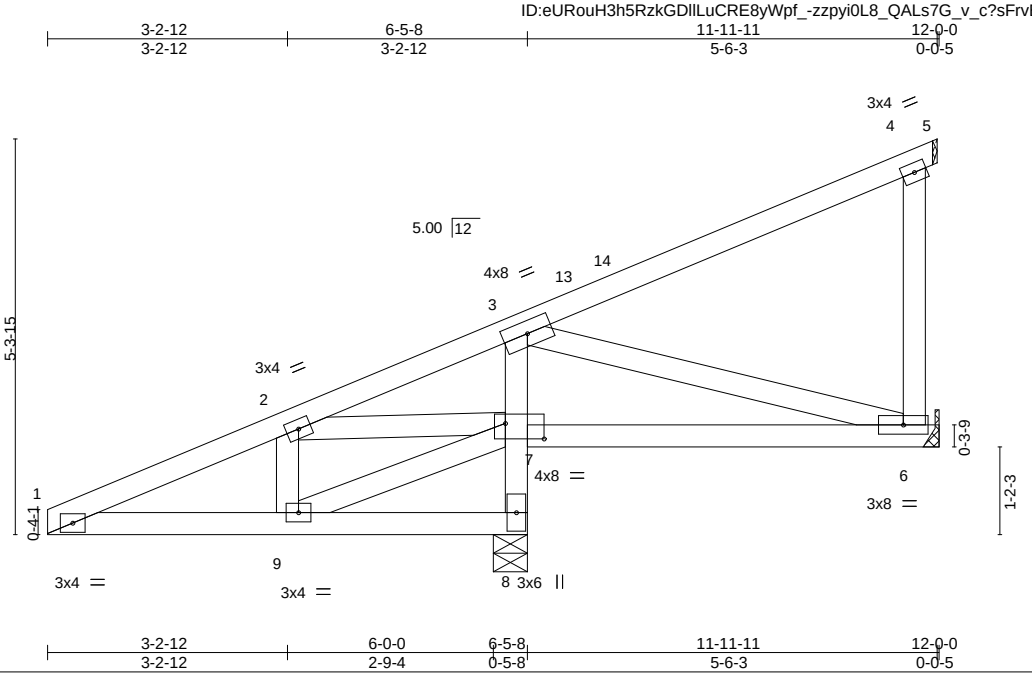

Plate Offsets (X,Y)-- [7:0-6-4,0-2-8]

LOADING (psf)		SPACING-	2-0-0	CSI.		DEFL.	in	(loc)	l/defl	L/d	PLATES	GRIP
TCLL	30.0	Plate Grip DOL	1.15	TC	0.53	Vert(LL)	-0.02	6-7	>999	240	MT20	220/195
(Roof Snow=30.0)		Lumber DOL	1.15	BC	0.56	Vert(CT)	-0.06	6-7	>999	180		
TCDL	14.0	Rep Stress Incr	YES	WB	0.60	Horz(CT)	-0.06	6	n/a	n/a		
BCLL	0.0 *	Code	IBC2015/TPI2014	Matrix-MSH		Wind(LL)	0.03	6-7	>999	360	Weight: 59 lb	FT = 20%
BCDL	10.0											

LUMBER-
TOP CHORD 2x4 DF No.1&Btr G
BOT CHORD 2x4 DF No.1&Btr G *Except*
3-8: 2x4 DF Std G
WEBS 2x4 DF Std G

BRACING-
TOP CHORD Structural wood sheathing directly applied or 6-0-0 oc purlins, except end verticals.
BOT CHORD Rigid ceiling directly applied or 4-7-14 oc bracing.

REACTIONS. (lb/size) 8=1371/0-5-8, 6=-84/Mechanical
Max Horz 8=129(LC 14)
Max Uplift 8=-133(LC 10), 6=-121(LC 24)
Max Grav 8=1425(LC 20), 6=1(LC 20)

FORCES. (lb) - Max. Comp./Max. Ten. - All forces 250 (lb) or less except when shown.
TOP CHORD 1-2=-243/431, 2-3=-826/1518, 4-6=-290/92
BOT CHORD 1-9=-350/250, 7-8=-1409/683, 3-7=-1441/562, 6-7=-1276/623
WEBS 3-6=-658/1347, 7-9=-320/35, 2-7=-992/583

NOTES-
1) Wind: ASCE 7-10; Vult=110mph (3-second gust) Vasd=87mph; TCDL=7.2psf; BCDL=4.2psf; h=25ft; Cat. II; Exp C; Enclosed; MWFRS (envelope) and C-C Exterior(2) 0-0-0 to 3-2-12, Interior(1) 3-2-12 to 11-11-11 zone; cantilever left and right exposed ; porch left and right exposed;C-C for members and forces & MWFRS for reactions shown; Lumber DOL=1.33 plate grip DOL=1.33
2) TCLL: ASCE 7-10; Pf=30.0 psf (flat roof snow); Category II; Exp C; Partially Exp.; Ct=1.00
3) Unbalanced snow loads have been considered for this design.
4) This truss has been designed for a 10.0 psf bottom chord live load nonconcurrent with any other live loads.
5) * This truss has been designed for a live load of 20.0psf on the bottom chord in all areas where a rectangle 3-6-0 tall by 2-0-0 wide will fit between the bottom chord and any other members.
6) A plate rating reduction of 20% has been applied for the green lumber members.
7) Refer to girder(s) for truss to truss connections.
8) Provide mechanical connection (by others) of truss to bearing plate capable of withstanding 100 lb uplift at joint(s) except (jt=lb) 8=133, 6=121.
9) This truss is designed for a creep factor of 3.01, which is used to calculate the Vert(CT) deflection per ANSI/TPI 1.

December 11,2019

WARNING - Verify design parameters and READ NOTES ON THIS AND INCLUDED MITEK REFERENCE PAGE MII-7473 rev. 10/03/2015 BEFORE USE.
Design valid for use only with MiTek® connectors. This design is based only upon parameters shown, and is for an individual building component, not a truss system. Before use, the building designer must verify the applicability of design parameters and properly incorporate this design into the overall building design. Bracing indicated is to prevent buckling of individual truss web and/or chord members only. Additional temporary and permanent bracing is always required for stability and to prevent collapse with possible personal injury and property damage. For general guidance regarding the fabrication, storage, delivery, erection and bracing of trusses and truss systems, see ***ANSI/TPI1 Quality Criteria, DSB-89 and BCSI Building Component Safety Information*** available from Truss Plate Institute, 218 N. Lee Street, Suite 312, Alexandria, VA 22314.

MiTek USA, Inc.
400 Sunrise Avenue, Suite 270
Roseville, CA 95661

Job	Truss	Truss Type	Qty	Ply	ESPINOZA R60548699
J19-319	JF13	Jack-Closed	1	1	Job Reference (optional)

Stockton Truss, STOCKTON, CA 95215 8.330 s Dec 5 2019 MiTek Industries, Inc. Tue Dec 10 11:44:42 2019 Page 1
ID:eURouH3h5RzkGDllLuCRE8yWpf_-R9NKvMMmljICUGqATi7EPTO6me8MWGwufFCSoTyANZp

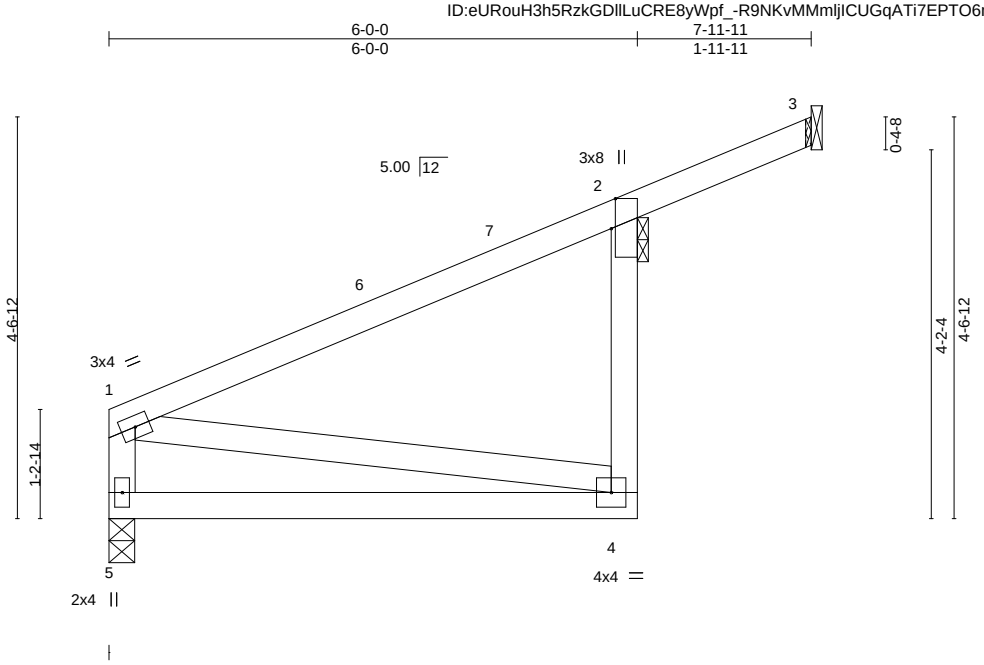

Plate Offsets (X,Y)-- [2:0-4-1,Edge]

LOADING (psf)		SPACING-	2-0-0	CSI.		DEFL.	in	(loc)	l/defl	L/d	PLATES	GRIP
TCLL	30.0	Plate Grip DOL	1.15	TC	0.41	Vert(LL)	-0.05	4-5	>999	240	MT20	220/195
(Roof Snow=30.0)		Lumber DOL	1.15	BC	0.25	Vert(CT)	-0.15	4-5	>459	180		
TCDL	14.0	Rep Stress Incr	YES	WB	0.00	Horz(CT)	-0.00	5	n/a	n/a		
BCLL	0.0 *	Code	IBC2015/TPI2014	Matrix-MP		Wind(LL)	0.09	4-5	>782	360	Weight: 33 lb	FT = 20%
BCDL	10.0											

LUMBER-
TOP CHORD 2x4 DF No.1&Btr G
BOT CHORD 2x4 DF No.1&Btr G
WEBS 2x4 DF Std G

BRACING-
TOP CHORD Structural wood sheathing directly applied or 6-0-0 oc purlins, except end verticals.
BOT CHORD Rigid ceiling directly applied or 10-0-0 oc bracing.

REACTIONS. (lb/size) 5=260/0-3-8, 3=-43/Mechanical, 2=580/0-1-8
Max Horz 2=84(LC 14)
Max Uplift 5=-46(LC 11), 3=-43(LC 1), 2=-50(LC 11)
Max Grav 5=260(LC 21), 3=8(LC 14), 2=631(LC 21)

FORCES. (lb) - Max. Comp./Max. Ten. - All forces 250 (lb) or less except when shown.

NOTES-
1) Wind: ASCE 7-10; Vult=110mph (3-second gust) Vasd=87mph; TCDL=7.2psf; BCDL=4.2psf; h=25ft; Cat. II; Exp C; Enclosed; MWFRS (envelope) and C-C Exterior(2) 0-1-13 to 3-1-13, Interior(1) 3-1-13 to 7-10-15 zone; cantilever left and right exposed ; porch left and right exposed;C-C for members and forces & MWFRS for reactions shown; Lumber DOL=1.33 plate grip DOL=1.33
2) TCLL: ASCE 7-10; Pf=30.0 psf (flat roof snow); Category II; Exp C; Partially Exp.; Ct=1.00
3) Unbalanced snow loads have been considered for this design.
4) This truss has been designed for a 10.0 psf bottom chord live load nonconcurrent with any other live loads.
5) * This truss has been designed for a live load of 20.0psf on the bottom chord in all areas where a rectangle 3-6-0 tall by 2-0-0 wide will fit between the bottom chord and any other members.
6) A plate rating reduction of 20% has been applied for the green lumber members.
7) Refer to girder(s) for truss to truss connections.
8) Provide mechanical connection (by others) of truss to bearing plate at joint(s) 2.
9) Provide mechanical connection (by others) of truss to bearing plate capable of withstanding 100 lb uplift at joint(s) 5, 3, 2.
10) Beveled plate or shim required to provide full bearing surface with truss chord at joint(s) 2.
11) Gap between inside of top chord bearing and first diagonal or vertical web shall not exceed 0.500in.
12) This truss is designed for a creep factor of 3.01, which is used to calculate the Vert(CT) deflection per ANSI/TPI 1.

December 11,2019

WARNING - Verify design parameters and READ NOTES ON THIS AND INCLUDED MITEK REFERENCE PAGE MII-7473 rev. 10/03/2015 BEFORE USE.
Design valid for use only with MiTek® connectors. This design is based only upon parameters shown, and is for an individual building component, not a truss system. Before use, the building designer must verify the applicability of design parameters and properly incorporate this design into the overall building design. Bracing indicated is to prevent buckling of individual truss web and/or chord members only. Additional temporary and permanent bracing is always required for stability and to prevent collapse with possible personal injury and property damage. For general guidance regarding the fabrication, storage, delivery, erection and bracing of trusses and truss systems, see ***ANSI/TPI1 Quality Criteria, DSB-89 and BCSI Building Component Safety Information*** available from Truss Plate Institute, 218 N. Lee Street, Suite 312, Alexandria, VA 22314.

MiTek USA, Inc.
400 Sunrise Avenue, Suite 270
Roseville, CA 95661

Job	Truss	Truss Type	Qty	Ply	ESPINOZA R60548700
J19-319	JF14	Jack-Closed	1	1	Job Reference (optional)

Stockton Truss, STOCKTON, CA 95215 8.330 s Dec 5 2019 MiTek Industries, Inc. Tue Dec 10 11:44:43 2019 Page 1
ID:eURouH3h5RzkGDllLuCRE8yWpf_-vLwj6iMOW1Q36QPM0PeTxgwHf2UbFjA1uvx?KvyANZo

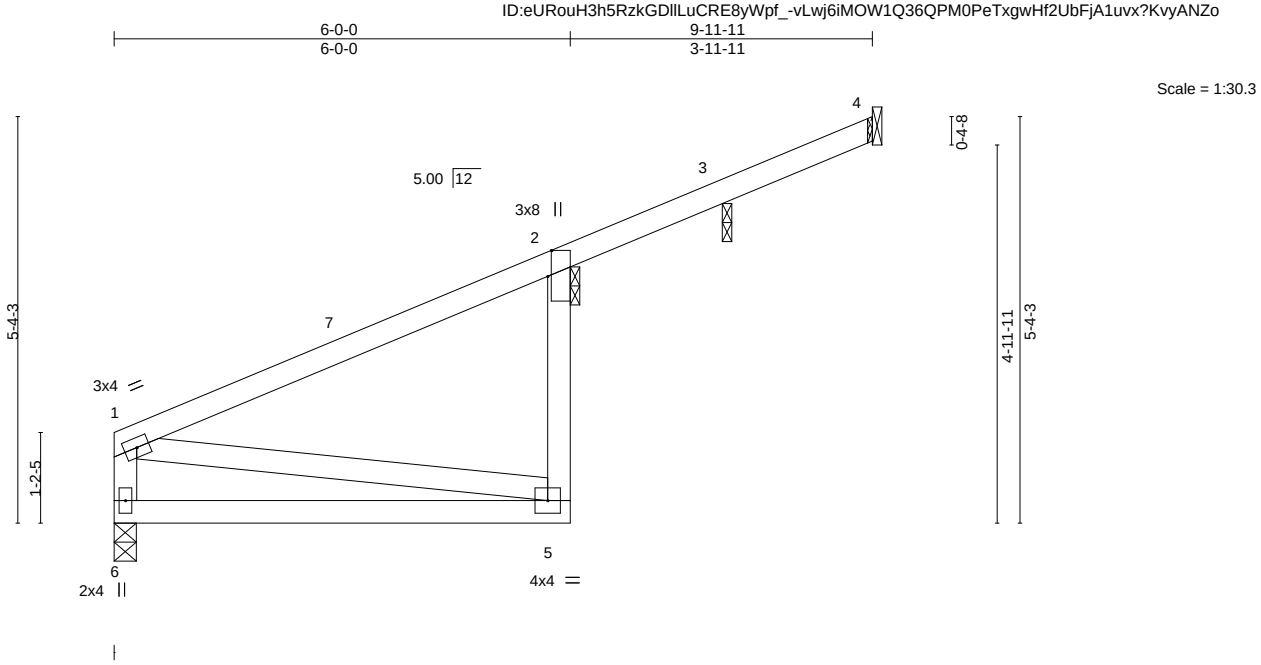

Plate Offsets (X,Y)-- [2:0-4-1,Edge]

LOADING (psf)		SPACING-	2-0-0	CSI.		DEFL.	in	(loc)	l/defl	L/d	PLATES	GRIP
TCLL	30.0	Plate Grip DOL	1.15	TC	0.40	Vert(LL)	-0.05	5-6	>999	240	MT20	220/195
(Roof Snow=30.0)		Lumber DOL	1.15	BC	0.25	Vert(CT)	-0.15	5-6	>459	180		
TCDL	14.0	Rep Stress Incr	YES	WB	0.00	Horz(CT)	-0.00	6	n/a	n/a		
BCLL	0.0 *	Code	IBC2015/TPI2014	Matrix-MP		Wind(LL)	0.09	5-6	>782	360	Weight: 36 lb	FT = 20%
BCDL	10.0											

LUMBER-
TOP CHORD 2x4 DF No.1&Btr G
BOT CHORD 2x4 DF No.1&Btr G
WEBS 2x4 DF Std G

BRACING-
TOP CHORD Structural wood sheathing directly applied or 6-0-0 oc purlins, except end verticals.
BOT CHORD Rigid ceiling directly applied or 10-0-0 oc bracing.

REACTIONS. All bearings 0-1-8 except (jt=length) 6=0-3-8, 4=Mechanical.
(lb) - Max Horz 2=106(LC 14)
Max Uplift All uplift 100 lb or less at joint(s) 6, 4, 2, 3
Max Grav All reactions 250 lb or less at joint(s) 4, 3 except 6=260(LC 1), 2=606(LC 21)

FORCES. (lb) - Max. Comp./Max. Ten. - All forces 250 (lb) or less except when shown.

NOTES-
1) Wind: ASCE 7-10; Vult=110mph (3-second gust) Vasd=87mph; TCDL=7.2psf; BCDL=4.2psf; h=25ft; Cat. II; Exp C; Enclosed; MWFRS (envelope) and C-C Exterior(2) 0-1-13 to 3-1-13, Interior(1) 3-1-13 to 9-10-15 zone; cantilever left and right exposed ; porch left and right exposed;C-C for members and forces & MWFRS for reactions shown; Lumber DOL=1.33 plate grip DOL=1.33
2) TCLL: ASCE 7-10; Pf=30.0 psf (flat roof snow); Category II; Exp C; Partially Exp.; Ct=1.00
3) Unbalanced snow loads have been considered for this design.
4) This truss has been designed for a 10.0 psf bottom chord live load nonconcurrent with any other live loads.
5) * This truss has been designed for a live load of 20.0psf on the bottom chord in all areas where a rectangle 3-6-0 tall by 2-0-0 wide will fit between the bottom chord and any other members.
6) A plate rating reduction of 20% has been applied for the green lumber members.
7) Refer to girder(s) for truss to truss connections.
8) Provide mechanical connection (by others) of truss to bearing plate at joint(s) 2, 3.
9) Provide mechanical connection (by others) of truss to bearing plate capable of withstanding 100 lb uplift at joint(s) 6, 4, 2, 3.
10) Beveled plate or shim required to provide full bearing surface with truss chord at joint(s) 2, 3.
11) Gap between inside of top chord bearing and first diagonal or vertical web shall not exceed 0.500in.
12) This truss is designed for a creep factor of 3.01, which is used to calculate the Vert(CT) deflection per ANSI/TPI 1.

December 11,2019

WARNING - Verify design parameters and READ NOTES ON THIS AND INCLUDED MITEK REFERENCE PAGE MII-7473 rev. 10/03/2015 BEFORE USE.
Design valid for use only with MiTek® connectors. This design is based only upon parameters shown, and is for an individual building component, not a truss system. Before use, the building designer must verify the applicability of design parameters and properly incorporate this design into the overall building design. Bracing indicated is to prevent buckling of individual truss web and/or chord members only. Additional temporary and permanent bracing is always required for stability and to prevent collapse with possible personal injury and property damage. For general guidance regarding the fabrication, storage, delivery, erection and bracing of trusses and truss systems, see ***ANSI/TPI1 Quality Criteria, DSB-89 and BCSI Building Component Safety Information*** available from Truss Plate Institute, 218 N. Lee Street, Suite 312, Alexandria, VA 22314.

MiTek USA, Inc.
400 Sunrise Avenue, Suite 270
Roseville, CA 95661

Job	Truss	Truss Type	Qty	Ply	ESPINOZA R60548701
J19-319	JF15	Jack-Closed	1	1	Job Reference (optional)

Stockton Truss, STOCKTON, CA 95215 8.330 s Dec 5 2019 MiTek Industries, Inc. Tue Dec 10 11:44:44 2019 Page 1
ID:eURouH3h5RzkGDllLuCRE8yWpf_-NYU5K2N0HLYwja_Ya79iUuTSQSqq_AQB7ZhZsLyANZn

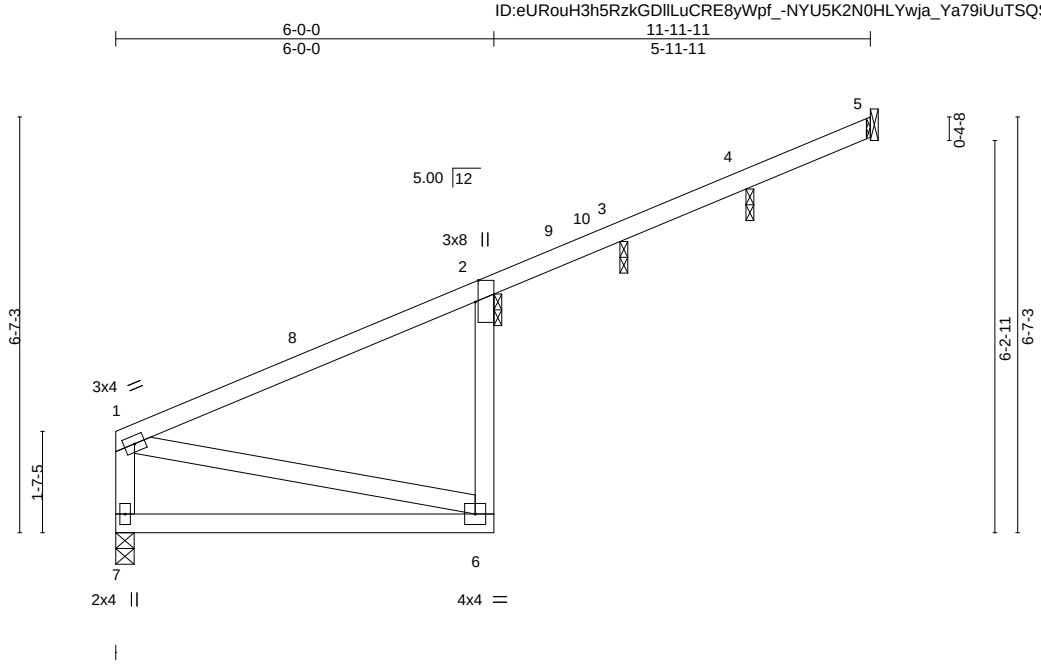

Plate Offsets (X,Y)-- [2:0-4-2,Edge]

LOADING (psf)		SPACING-	2-0-0	CSI.		DEFL.	in	(loc)	l/defl	L/d	PLATES	GRIP
TCLL	30.0	Plate Grip DOL	1.15	TC	0.40	Vert(LL)	-0.05	6-7	>999	240	MT20	220/195
(Roof Snow=30.0)		Lumber DOL	1.15	BC	0.25	Vert(CT)	-0.15	6-7	>459	180		
TCDL	14.0	Rep Stress Incr	YES	WB	0.00	Horz(CT)	-0.00	5	n/a	n/a		
BCLL	0.0 *	Code	IBC2015/TPI2014	Matrix-MP		Wind(LL)	0.09	6-7	>781	360	Weight: 40 lb	FT = 20%
BCDL	10.0											

LUMBER-
TOP CHORD 2x4 DF No.1&Btr G
BOT CHORD 2x4 DF No.1&Btr G
WEBS 2x4 DF Std G

BRACING-
TOP CHORD Structural wood sheathing directly applied or 6-0-0 oc purlins, except end verticals.
BOT CHORD Rigid ceiling directly applied or 10-0-0 oc bracing.

REACTIONS. All bearings 0-1-8 except (jt=length) 7=0-3-8, 5=Mechanical.
(lb) - Max Horz 2=127(LC 14)
Max Uplift All uplift 100 lb or less at joint(s) 7, 5, 2, 3, 4
Max Grav All reactions 250 lb or less at joint(s) 5, 3, 4 except 7=260(LC 1), 2=582(LC 21)

FORCES. (lb) - Max. Comp./Max. Ten. - All forces 250 (lb) or less except when shown.

NOTES-
1) Wind: ASCE 7-10; Vult=110mph (3-second gust) Vasd=87mph; TCDL=7.2psf; BCDL=4.2psf; h=25ft; Cat. II; Exp C; Enclosed; MWFRS (envelope) and C-C Exterior(2) 0-1-13 to 3-1-13, Interior(1) 3-1-13 to 11-10-15 zone; cantilever left and right exposed ; porch left and right exposed;C-C for members and forces & MWFRS for reactions shown; Lumber DOL=1.33 plate grip DOL=1.33
2) TCLL: ASCE 7-10; Pf=30.0 psf (flat roof snow); Category II; Exp C; Partially Exp.; Ct=1.00
3) Unbalanced snow loads have been considered for this design.
4) This truss has been designed for a 10.0 psf bottom chord live load nonconcurrent with any other live loads.
5) * This truss has been designed for a live load of 20.0psf on the bottom chord in all areas where a rectangle 3-6-0 tall by 2-0-0 wide will fit between the bottom chord and any other members.
6) A plate rating reduction of 20% has been applied for the green lumber members.
7) Refer to girder(s) for truss to truss connections.
8) Provide mechanical connection (by others) of truss to bearing plate at joint(s) 2, 3, 4.
9) Provide mechanical connection (by others) of truss to bearing plate capable of withstanding 100 lb uplift at joint(s) 7, 5, 2, 3, 4.
10) Beveled plate or shim required to provide full bearing surface with truss chord at joint(s) 2, 3, 4.
11) Gap between inside of top chord bearing and first diagonal or vertical web shall not exceed 0.500in.
12) This truss is designed for a creep factor of 3.01, which is used to calculate the Vert(CT) deflection per ANSI/TPI 1.

December 11,2019

WARNING - Verify design parameters and READ NOTES ON THIS AND INCLUDED MITEK REFERENCE PAGE MII-7473 rev. 10/03/2015 BEFORE USE.
Design valid for use only with MiTek® connectors. This design is based only upon parameters shown, and is for an individual building component, not a truss system. Before use, the building designer must verify the applicability of design parameters and properly incorporate this design into the overall building design. Bracing indicated is to prevent buckling of individual truss web and/or chord members only. Additional temporary and permanent bracing is always required for stability and to prevent collapse with possible personal injury and property damage. For general guidance regarding the fabrication, storage, delivery, erection and bracing of trusses and truss systems, see ***ANSI/TPI1 Quality Criteria, DSB-89 and BCSI Building Component Safety Information*** available from Truss Plate Institute, 218 N. Lee Street, Suite 312, Alexandria, VA 22314.

MiTek USA, Inc.
400 Sunrise Avenue, Suite 270
Roseville, CA 95661

Job	Truss	Truss Type	Qty	Ply	ESPINOZA R60548702
J19-319	JF16	Jack-Closed	1	1	Job Reference (optional)

Stockton Truss, STOCKTON, CA 95215 8.330 s Dec 5 2019 MiTek Industries, Inc. Tue Dec 10 11:44:45 2019 Page 1
ID:eURouH3h5RzkGDllLuCRE8yWpf_-rk2TXOOf1egnLkZl8qgx050hwrCdjbcKLDQ6OoyANZm

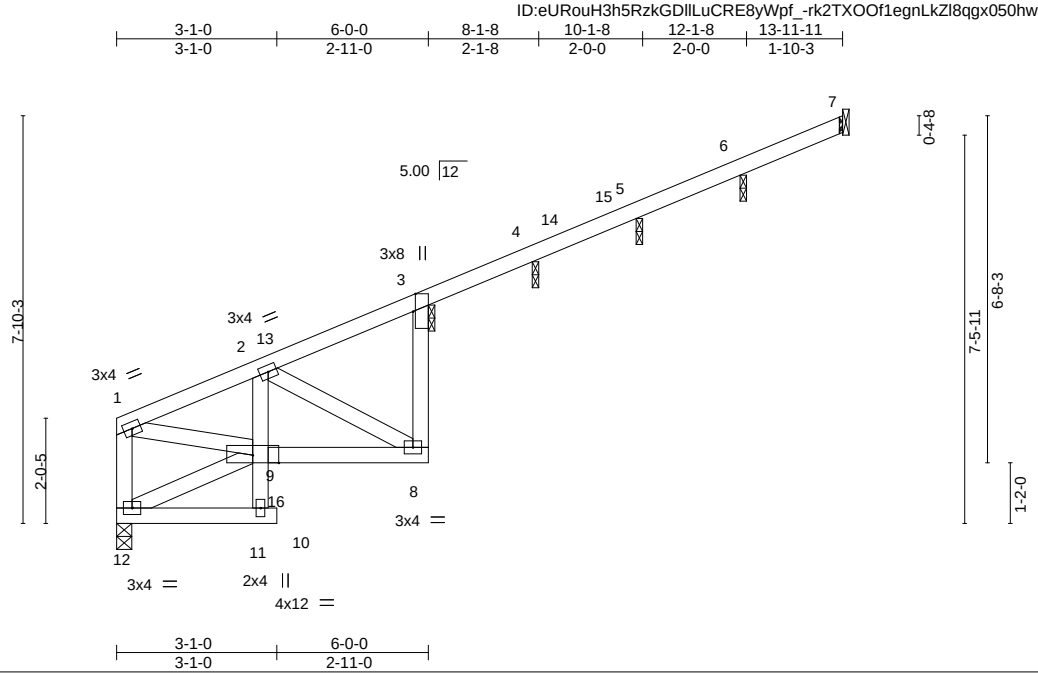

Plate Offsets (X,Y)-- [3:0-4-2,Edge]

LOADING (psf)		SPACING-	2-0-0	CSI.		DEFL.	in	(loc)	l/defl	L/d	PLATES	GRIP
TCLL	30.0	Plate Grip DOL	1.15	TC	0.10	Vert(LL)	-0.01	8-9	>999	240	MT20	220/195
(Roof Snow=30.0)		Lumber DOL	1.15	BC	0.09	Vert(CT)	-0.02	8-9	>999	180		
TCDL	14.0	Rep Stress Incr	YES	WB	0.13	Horz(CT)	-0.00	12	n/a	n/a		
BCLL	0.0 *	Code IBC2015/TPI2014		Matrix-MP		Wind(LL)	0.01	8-9	>999	360	Weight: 50 lb	FT = 20%
BCDL	10.0											

LUMBER-
TOP CHORD 2x4 DF No.1&Btr G
BOT CHORD 2x4 DF No.1&Btr G *Except*
2-11: 2x4 DF Std G
WEBS 2x4 DF Std G

BRACING-
TOP CHORD Structural wood sheathing directly applied or 6-0-0 oc purlins, except end verticals.
BOT CHORD Rigid ceiling directly applied or 10-0-0 oc bracing. Except: 10-0-0 oc bracing: 9-11

REACTIONS. All bearings 0-1-8 except (jt=length) 7=Mechanical, 12=0-3-8.
(lb) - Max Horz 3=149(LC 14)
Max Uplift All uplift 100 lb or less at joint(s) 7, 3, 12, 4, 5, 6
Max Grav All reactions 250 lb or less at joint(s) 7, 4, 5, 6 except 3=453(LC 1), 12=299(LC 1)

FORCES. (lb) - Max. Comp./Max. Ten. - All forces 250 (lb) or less except when shown.
TOP CHORD 1-12=-270/236, 1-2=-346/358
BOT CHORD 8-9=-156/302
WEBS 1-9=-301/300, 2-8=-344/181

NOTES-
1) Wind: ASCE 7-10; Vult=110mph (3-second gust) Vasd=87mph; TCDL=7.2psf; BCDL=4.2psf; h=25ft; Cat. II; Exp C; Enclosed; MWFRS (envelope) and C-C Exterior(2) 0-1-13 to 3-1-13, Interior(1) 3-1-13 to 13-10-15 zone; cantilever left and right exposed ; porch left and right exposed;C-C for members and forces & MWFRS for reactions shown; Lumber DOL=1.33 plate grip DOL=1.33
2) TCLL: ASCE 7-10; Pf=30.0 psf (flat roof snow); Category II; Exp C; Partially Exp.; Ct=1.00
3) Unbalanced snow loads have been considered for this design.
4) This truss has been designed for a 10.0 psf bottom chord live load nonconcurrent with any other live loads.
5) * This truss has been designed for a live load of 20.0psf on the bottom chord in all areas where a rectangle 3-6-0 tall by 2-0-0 wide will fit between the bottom chord and any other members.
6) A plate rating reduction of 20% has been applied for the green lumber members.
7) Refer to girder(s) for truss to truss connections.
8) Provide mechanical connection (by others) of truss to bearing plate at joint(s) 3, 4, 5, 6.
9) Provide mechanical connection (by others) of truss to bearing plate capable of withstanding 100 lb uplift at joint(s) 7, 3, 12, 4, 5, 6.
10) Beveled plate or shim required to provide full bearing surface with truss chord at joint(s) 3, 4, 5, 6.
11) Gap between inside of top chord bearing and first diagonal or vertical web shall not exceed 0.500in.
12) This truss is designed for a creep factor of 3.01, which is used to calculate the Vert(CT) deflection per ANSI/TPI 1.

December 11,2019

WARNING - Verify design parameters and READ NOTES ON THIS AND INCLUDED MITEK REFERENCE PAGE MII-7473 rev. 10/03/2015 BEFORE USE.
Design valid for use only with MiTek® connectors. This design is based only upon parameters shown, and is for an individual building component, not a truss system. Before use, the building designer must verify the applicability of design parameters and properly incorporate this design into the overall building design. Bracing indicated is to prevent buckling of individual truss web and/or chord members only. Additional temporary and permanent bracing is always required for stability and to prevent collapse with possible personal injury and property damage. For general guidance regarding the fabrication, storage, delivery, erection and bracing of trusses and truss systems, see ***ANSI/TPI1 Quality Criteria, DSB-89 and BCSI Building Component Safety Information*** available from Truss Plate Institute, 218 N. Lee Street, Suite 312, Alexandria, VA 22314.

MiTek USA, Inc.
400 Sunrise Avenue, Suite 270
Roseville, CA 95661

Job	Truss	Truss Type	Qty	Ply	ESPINOZA R60548703
J19-319	JF17	Jack-Closed	1	1	Job Reference (optional)

Stockton Truss, STOCKTON, CA 95215 8.330 s Dec 5 2019 MiTek Industries, Inc. Tue Dec 10 11:44:46 2019 Page 1
ID:eURouH3h5RzkGDllLuCRE8yWpf_-JwcrlkPHoyoezu8xiYBAZJYsfFXIS2sUatAfxEyANZl

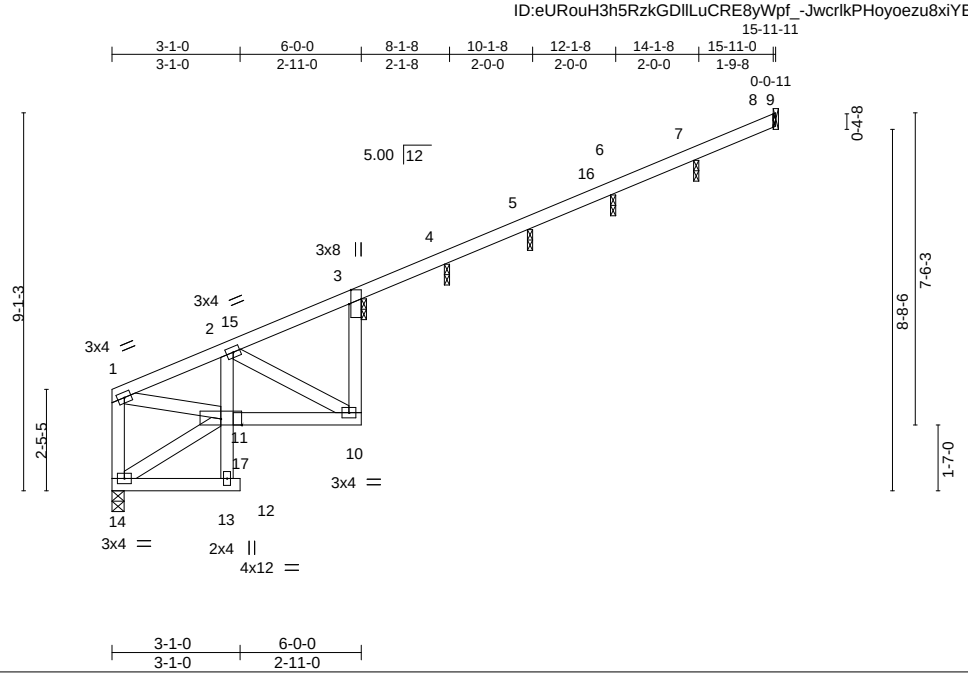

3-1-0 6-0-0
3-1-0 2-11-0

Plate Offsets (X,Y)-- [3:0-4-2,Edge]

LOADING (psf)		SPACING-	2-0-0	CSI.		DEFL.	in	(loc)	l/defl	L/d	PLATES	GRIP
TCLL	30.0	Plate Grip DOL	1.15	TC	0.10	Vert(LL)	-0.01	10-11	>999	240	MT20	220/195
(Roof Snow=30.0)		Lumber DOL	1.15	BC	0.12	Vert(CT)	-0.02	10-11	>999	180		
TCDL	14.0	Rep Stress Incr	YES	WB	0.13	Horz(CT)	-0.00	14	n/a	n/a		
BCLL	0.0 *	Code IBC2015/TPI2014		Matrix-MP		Wind(LL)	0.01	10-11	>999	360	Weight: 55 lb	FT = 20%
BCDL	10.0											

LUMBER-
TOP CHORD 2x4 DF No.1&Btr G
BOT CHORD 2x4 DF No.1&Btr G *Except*
2-13: 2x4 DF Std G
WEBS 2x4 DF Std G

BRACING-
TOP CHORD Structural wood sheathing directly applied or 6-0-0 oc purlins, except end verticals.
BOT CHORD Rigid ceiling directly applied or 10-0-0 oc bracing. Except: 10-0-0 oc bracing: 11-13

REACTIONS. All bearings 0-1-8 except (jt=length) 14=0-3-8, 8=Mechanical.
(lb) - Max Horz 3=171(LC 14)
Max Uplift All uplift 100 lb or less at joint(s) 14, 4, 5, 6, 7, 8
Max Grav All reactions 250 lb or less at joint(s) 4, 5, 6, 7, 8 except 3=453(LC 1), 14=299(LC 1)

FORCES. (lb) - Max. Comp./Max. Ten. - All forces 250 (lb) or less except when shown.
TOP CHORD 1-14=-270/249, 1-2=-347/381, 2-3=-51/296
BOT CHORD 10-11=-125/302
WEBS 1-11=-323/301, 2-10=-343/146

NOTES-
1) Wind: ASCE 7-10; Vult=110mph (3-second gust) Vasd=87mph; TCDL=7.2psf; BCDL=4.2psf; h=25ft; Cat. II; Exp C; Enclosed; MWFRS (envelope) and C-C Exterior(2) 0-1-13 to 3-1-13, Interior(1) 3-1-13 to 15-11-11 zone; cantilever left and right exposed ; porch left and right exposed;C-C for members and forces & MWFRS for reactions shown; Lumber DOL=1.33 plate grip DOL=1.33
2) TCLL: ASCE 7-10; Pf=30.0 psf (flat roof snow); Category II; Exp C; Partially Exp.; Ct=1.00
3) Unbalanced snow loads have been considered for this design.
4) This truss has been designed for a 10.0 psf bottom chord live load nonconcurrent with any other live loads.
5) * This truss has been designed for a live load of 20.0psf on the bottom chord in all areas where a rectangle 3-6-0 tall by 2-0-0 wide will fit between the bottom chord and any other members.
6) A plate rating reduction of 20% has been applied for the green lumber members.
7) Refer to girder(s) for truss to truss connections.
8) Provide mechanical connection (by others) of truss to bearing plate at joint(s) 3, 4, 5, 6, 7.
9) Provide mechanical connection (by others) of truss to bearing plate capable of withstanding 100 lb uplift at joint(s) 14, 4, 5, 6, 7, 8.
10) Beveled plate or shim required to provide full bearing surface with truss chord at joint(s) 3, 4, 5, 6, 7.
11) Gap between inside of top chord bearing and first diagonal or vertical web shall not exceed 0.500in.
12) This truss is designed for a creep factor of 3.01, which is used to calculate the Vert(CT) deflection per ANSI/TPI 1.

December 11,2019

WARNING - Verify design parameters and READ NOTES ON THIS AND INCLUDED MITEK REFERENCE PAGE MII-7473 rev. 10/03/2015 BEFORE USE.
Design valid for use only with MiTek® connectors. This design is based only upon parameters shown, and is for an individual building component, not a truss system. Before use, the building designer must verify the applicability of design parameters and properly incorporate this design into the overall building design. Bracing indicated is to prevent buckling of individual truss web and/or chord members only. Additional temporary and permanent bracing is always required for stability and to prevent collapse with possible personal injury and property damage. For general guidance regarding the fabrication, storage, delivery, erection and bracing of trusses and truss systems, see ***ANSI/TPI1 Quality Criteria, DSB-89 and BCSI Building Component Safety Information*** available from Truss Plate Institute, 218 N. Lee Street, Suite 312, Alexandria, VA 22314.

MiTek USA, Inc.
400 Sunrise Avenue, Suite 270
Roseville, CA 95661

Job	Truss	Truss Type	Qty	Ply	ESPINOZA R60548704
J19-319	JF18	Jack-Closed	1	1	Job Reference (optional)

Stockton Truss, STOCKTON, CA 95215 8.330 s Dec 5 2019 MiTek Industries, Inc. Tue Dec 10 11:44:47 2019 Page 1

ID:eURouH3h5RzkGDllLuCRE8yWpf_-o7ADy4QvZFwVa2j7FFjP6W5_GfsYBV6dpXvDTgyANZk

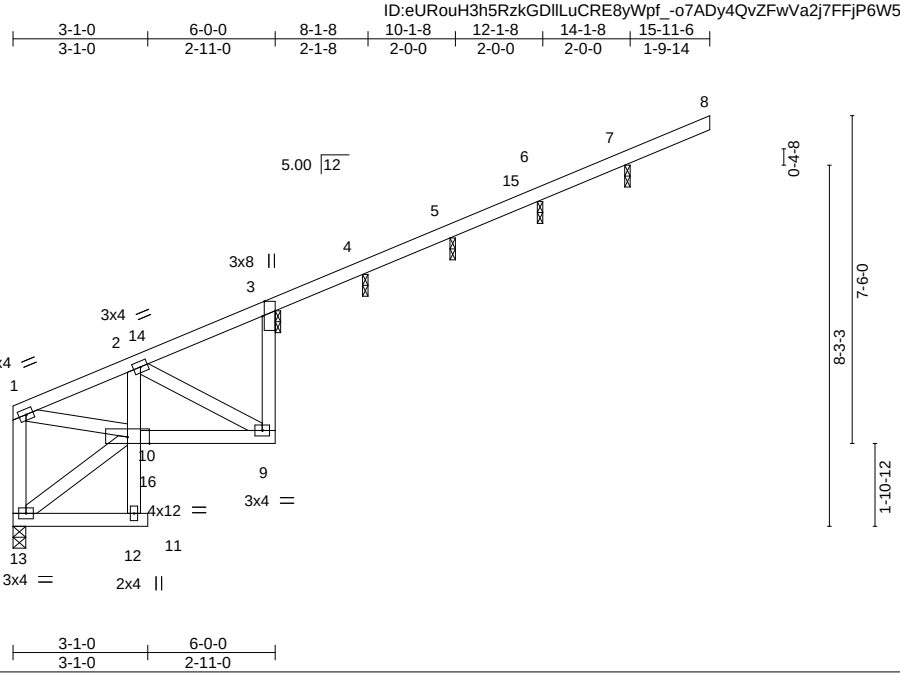

Plate Offsets (X,Y)-- [3:0-4-2,Edge]

LOADING (psf)		SPACING-	2-0-0	CSI.		DEFL.	in	(loc)	l/defl	L/d	PLATES	GRIP
TCLL	30.0	Plate Grip DOL	1.15	TC	0.30	Vert(LL)	-0.01	9-10	>999	240	MT20	220/195
(Roof Snow=30.0)		Lumber DOL	1.15	BC	0.19	Vert(CT)	-0.02	9-10	>999	180		
TCDL	14.0	Rep Stress Incr	YES	WB	0.13	Horz(CT)	-0.00	13	n/a	n/a		
BCLL	0.0 *	Code	IBC2015/TPI2014	Matrix-MP		Wind(LL)	0.01	9-10	>999	360	Weight: 56 lb	FT = 20%
BCDL	10.0											

LUMBER-

TOP CHORD 2x4 DF No.1&Btr G
BOT CHORD 2x4 DF No.1&Btr G *Except*
2-12: 2x4 DF Std G
WEBS 2x4 DF Std G

BRACING-

TOP CHORD Structural wood sheathing directly applied or 6-0-0 oc purlins, except end verticals.
BOT CHORD Rigid ceiling directly applied or 10-0-0 oc bracing. Except: 10-0-0 oc bracing: 10-12

REACTIONS. All bearings 0-1-8 except (jt=length) 13=0-3-8.
(lb) - Max Horz 3=171(LC 11)
Max Uplift All uplift 100 lb or less at joint(s) 13, 4, 5, 6, 7
Max Grav All reactions 250 lb or less at joint(s) 4, 5, 6 except 3=453(LC 1), 13=299(LC 1), 7=466(LC 21)

FORCES. (lb) - Max. Comp./Max. Ten. - All forces 250 (lb) or less except when shown.
TOP CHORD 1-13=-270/257, 1-2=-347/396, 2-3=-51/333
BOT CHORD 9-10=-103/302
WEBS 1-10=-338/301, 2-9=-343/120

NOTES-

1) Wind: ASCE 7-10; Vult=110mph (3-second gust) Vasd=87mph; TCDL=7.2psf; BCDL=4.2psf; h=25ft; Cat. II; Exp C; Enclosed; MWFRS (envelope) and C-C Exterior(2) 0-1-13 to 3-1-13, Interior(1) 3-1-13 to 15-11-6 zone; cantilever left and right exposed ; porch left and right exposed;C-C for members and forces & MWFRS for reactions shown; Lumber DOL=1.33 plate grip DOL=1.33
2) TCLL: ASCE 7-10; Pf=30.0 psf (flat roof snow); Category II; Exp C; Partially Exp.; Ct=1.00
3) Unbalanced snow loads have been considered for this design.
4) This truss has been designed for greater of min roof live load of 19.0 psf or 1.00 times flat roof load of 30.0 psf on overhangs non-concurrent with other live loads.
5) This truss has been designed for a 10.0 psf bottom chord live load nonconcurrent with any other live loads.
6) * This truss has been designed for a live load of 20.0psf on the bottom chord in all areas where a rectangle 3-6-0 tall by 2-0-0 wide will fit between the bottom chord and any other members.
7) A plate rating reduction of 20% has been applied for the green lumber members.
8) Provide mechanical connection (by others) of truss to bearing plate at joint(s) 3, 4, 5, 6, 7.
9) Provide mechanical connection (by others) of truss to bearing plate capable of withstanding 100 lb uplift at joint(s) 13, 4, 5, 6, 7.
10) Beveled plate or shim required to provide full bearing surface with truss chord at joint(s) 3, 4, 5, 6, 7.
11) Gap between inside of top chord bearing and first diagonal or vertical web shall not exceed 0.500in.
12) This truss is designed for a creep factor of 3.01, which is used to calculate the Vert(CT) deflection per ANSI/TPI 1.

December 11,2019

WARNING - Verify design parameters and READ NOTES ON THIS AND INCLUDED MITEK REFERENCE PAGE MII-7473 rev. 10/03/2015 BEFORE USE.
Design valid for use only with MiTek® connectors. This design is based only upon parameters shown, and is for an individual building component, not a truss system. Before use, the building designer must verify the applicability of design parameters and properly incorporate this design into the overall building design. Bracing indicated is to prevent buckling of individual truss web and/or chord members only. Additional temporary and permanent bracing is always required for stability and to prevent collapse with possible personal injury and property damage. For general guidance regarding the fabrication, storage, delivery, erection and bracing of trusses and truss systems, see ***ANSI/TPI1 Quality Criteria, DSB-89 and BCSI Building Component Safety Information*** available from Truss Plate Institute, 218 N. Lee Street, Suite 312, Alexandria, VA 22314.

MiTek USA, Inc.
400 Sunrise Avenue, Suite 270
Roseville, CA 95661

Job	Truss	Truss Type	Qty	Ply	ESPINOZA R60548705
J19-319	JG4	Jack-Closed	1	1	Job Reference (optional)

Stockton Truss, STOCKTON, CA 95215 8.330 s Dec 5 2019 MiTek Industries, Inc. Tue Dec 10 11:44:48 2019 Page 1
ID:eURouH3h5RzkGDllLuCRE8yWpf_-GJkcAQQXKZ2LCBIKpyEeekeA?3DNw_Tm2Bfm?6yANZj

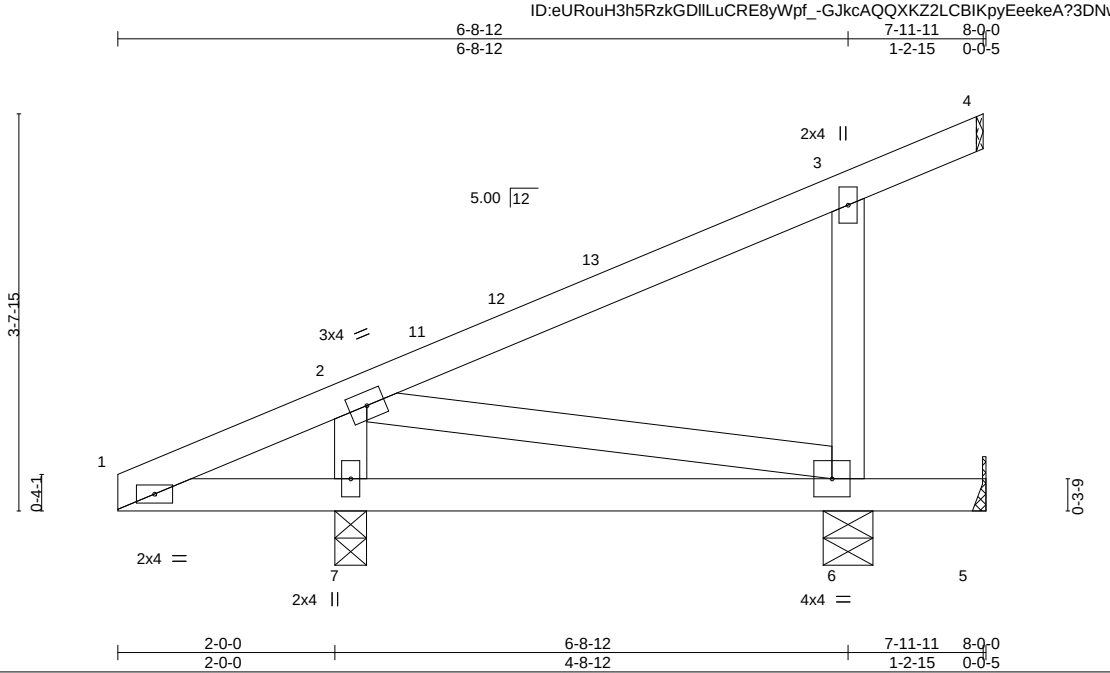

LOADING (psf)		SPACING-	2-0-0	CSI.		DEFL.	in	(loc)	l/defl	L/d	PLATES	GRIP
TCLL	30.0	Plate Grip DOL	1.15	TC	0.24	Vert(LL)	-0.01	6-7	>999	240	MT20	220/195
(Roof Snow=30.0)		Lumber DOL	1.15	BC	0.09	Vert(CT)	-0.02	6-7	>999	180		
TCDL	14.0	Rep Stress Incr	YES	WB	0.06	Horz(CT)	-0.00	5	n/a	n/a		
BCLL	0.0 *	Code	IBC2015/TPI2014	Matrix-MP		Wind(LL)	0.01	6-7	>999	360	Weight: 34 lb	FT = 20%
BCDL	10.0											

LUMBER-
TOP CHORD 2x4 DF No.1&Btr G
BOT CHORD 2x4 DF No.1&Btr G
WEBS 2x4 DF Std G

BRACING-
TOP CHORD Structural wood sheathing directly applied or 6-0-0 oc purlins.
BOT CHORD Rigid ceiling directly applied or 6-0-0 oc bracing.

REACTIONS. (lb/size) 5=-13/Mechanical, 6=362/0-5-8, 7=512/0-3-8
Max Horz 7=84(LC 14)
Max Uplift 5=-26(LC 5), 6=-110(LC 11), 7=-44(LC 10)
Max Grav 5=8(LC 11), 6=425(LC 20), 7=519(LC 20)

FORCES. (lb) - Max. Comp./Max. Ten. - All forces 250 (lb) or less except when shown.
WEBS 3-6=-352/141, 2-7=-456/102

NOTES-
1) Wind: ASCE 7-10; Vult=110mph (3-second gust) Vasd=87mph; TCDL=7.2psf; BCDL=4.2psf; h=25ft; Cat. II; Exp C; Enclosed; MWFRS (envelope) and C-C Exterior(2) 0-0-0 to 3-0-0, Interior(1) 3-0-0 to 7-11-11 zone; cantilever left and right exposed ; porch left and right exposed;C-C for members and forces & MWFRS for reactions shown; Lumber DOL=1.33 plate grip DOL=1.33
2) TCLL: ASCE 7-10; Pf=30.0 psf (flat roof snow); Category II; Exp C; Partially Exp.; Ct=1.00
3) Unbalanced snow loads have been considered for this design.
4) This truss has been designed for a 10.0 psf bottom chord live load nonconcurrent with any other live loads.
5) * This truss has been designed for a live load of 20.0psf on the bottom chord in all areas where a rectangle 3-6-0 tall by 2-0-0 wide will fit between the bottom chord and any other members.
6) A plate rating reduction of 20% has been applied for the green lumber members.
7) Refer to girder(s) for truss to truss connections.
8) Provide mechanical connection (by others) of truss to bearing plate capable of withstanding 100 lb uplift at joint(s) 5, 7 except (jt=lb) 6=110.
9) This truss is designed for a creep factor of 3.01, which is used to calculate the Vert(CT) deflection per ANSI/TPI 1.

December 11,2019

WARNING - Verify design parameters and READ NOTES ON THIS AND INCLUDED MITEK REFERENCE PAGE MII-7473 rev. 10/03/2015 BEFORE USE.
Design valid for use only with MiTek® connectors. This design is based only upon parameters shown, and is for an individual building component, not a truss system. Before use, the building designer must verify the applicability of design parameters and properly incorporate this design into the overall building design. Bracing indicated is to prevent buckling of individual truss web and/or chord members only. Additional temporary and permanent bracing is always required for stability and to prevent collapse with possible personal injury and property damage. For general guidance regarding the fabrication, storage, delivery, erection and bracing of trusses and truss systems, see ***ANSI/TPI1 Quality Criteria, DSB-89 and BCSI Building Component Safety Information*** available from Truss Plate Institute, 218 N. Lee Street, Suite 312, Alexandria, VA 22314.

MiTek USA, Inc.
400 Sunrise Avenue, Suite 270
Roseville, CA 95661

Job	Truss	Truss Type	Qty	Ply	ESPINOZA R60548706
J19-319	JG5	Jack-Closed	1	1	Job Reference (optional)

Stockton Truss, STOCKTON, CA 95215 8.330 s Dec 5 2019 MiTek Industries, Inc. Tue Dec 10 11:44:49 2019 Page 1
ID:eURouH3h5RzkGDllLuCRE8yWpf_-kVI_NlR95tACqLtWNgltBxAL5TZdfQRwGrOKYZyANZi

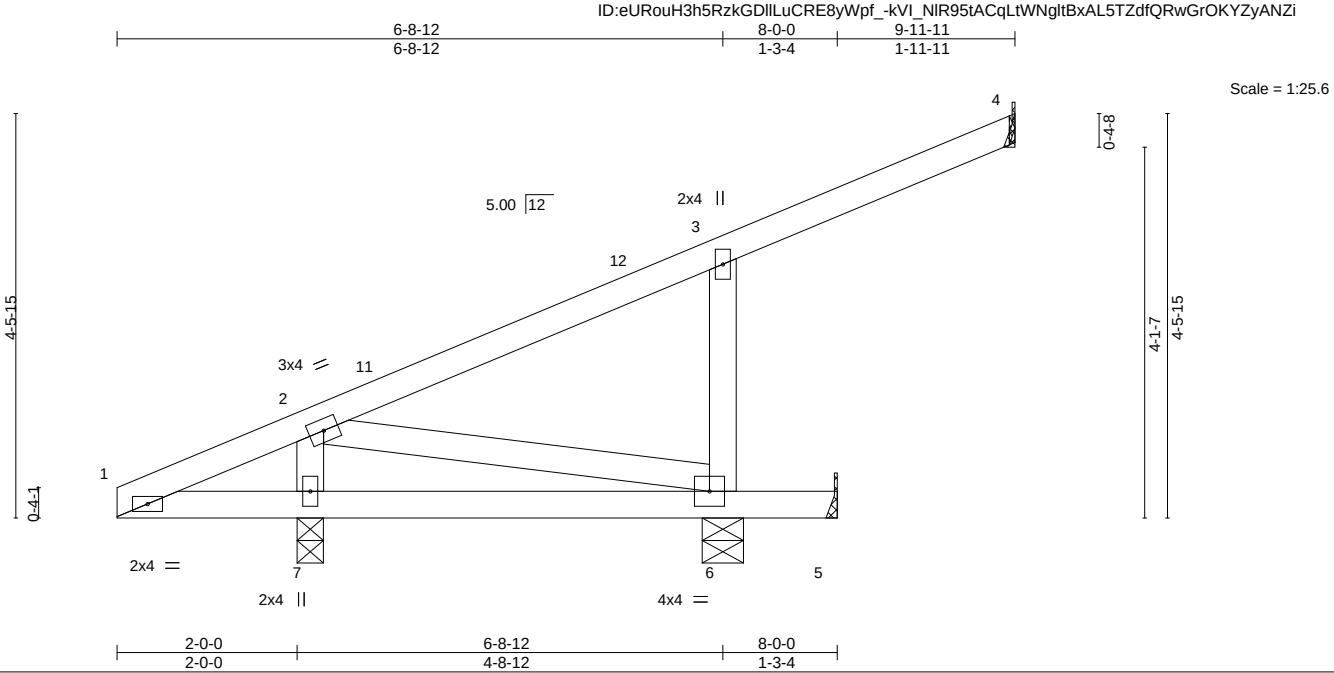

LOADING (psf)		SPACING-	2-0-0	CSI.		DEFL.	in	(loc)	l/defl	L/d	PLATES	GRIP
TCLL	30.0	Plate Grip DOL	1.15	TC	0.21	Vert(LL)	-0.01	6-7	>999	240	MT20	220/195
(Roof Snow=30.0)		Lumber DOL	1.15	BC	0.08	Vert(CT)	-0.02	6-7	>999	180		
TCDL	14.0	Rep Stress Incr	YES	WB	0.08	Horz(CT)	-0.00	4	n/a	n/a		
BCLL	0.0 *	Code	IBC2015/TPI2014	Matrix-MP		Wind(LL)	0.01	6-7	>999	360	Weight: 37 lb	FT = 20%
BCDL	10.0											

LUMBER-
TOP CHORD 2x4 DF No.1&Btr G
BOT CHORD 2x4 DF No.1&Btr G
WEBS 2x4 DF Std G

BRACING-
TOP CHORD Structural wood sheathing directly applied or 6-0-0 oc purlins.
BOT CHORD Rigid ceiling directly applied or 6-0-0 oc bracing.

REACTIONS. All bearings Mechanical except (jt=length) 6=0-5-8, 7=0-3-8.
(lb) - Max Horz 7=107(LC 14)
Max Uplift All uplift 100 lb or less at joint(s) 4, 5, 6, 7
Max Grav All reactions 250 lb or less at joint(s) 4, 5 except 6=521(LC 21), 7=496(LC 1)

FORCES. (lb) - Max. Comp./Max. Ten. - All forces 250 (lb) or less except when shown.
WEBS 3-6=-459/167, 2-7=-419/101

NOTES-
1) Wind: ASCE 7-10; Vult=110mph (3-second gust) Vasd=87mph; TCDL=7.2psf; BCDL=4.2psf; h=25ft; Cat. II; Exp C; Enclosed; MWFRS (envelope) and C-C Exterior(2) 0-0-0 to 3-0-0, Interior(1) 3-0-0 to 9-10-15 zone; cantilever left and right exposed ; porch left and right exposed;C-C for members and forces & MWFRS for reactions shown; Lumber DOL=1.33 plate grip DOL=1.33
2) TCLL: ASCE 7-10; Pf=30.0 psf (flat roof snow); Category II; Exp C; Partially Exp.; Ct=1.00
3) Unbalanced snow loads have been considered for this design.
4) This truss has been designed for a 10.0 psf bottom chord live load nonconcurrent with any other live loads.
5) * This truss has been designed for a live load of 20.0psf on the bottom chord in all areas where a rectangle 3-6-0 tall by 2-0-0 wide will fit between the bottom chord and any other members.
6) A plate rating reduction of 20% has been applied for the green lumber members.
7) Refer to girder(s) for truss to truss connections.
8) Provide mechanical connection (by others) of truss to bearing plate capable of withstanding 100 lb uplift at joint(s) 4, 5, 6, 7.
9) This truss is designed for a creep factor of 3.01, which is used to calculate the Vert(CT) deflection per ANSI/TPI 1.

December 11,2019

WARNING - Verify design parameters and READ NOTES ON THIS AND INCLUDED MITEK REFERENCE PAGE MII-7473 rev. 10/03/2015 BEFORE USE.
Design valid for use only with MiTek® connectors. This design is based only upon parameters shown, and is for an individual building component, not a truss system. Before use, the building designer must verify the applicability of design parameters and properly incorporate this design into the overall building design. Bracing indicated is to prevent buckling of individual truss web and/or chord members only. Additional temporary and permanent bracing is always required for stability and to prevent collapse with possible personal injury and property damage. For general guidance regarding the fabrication, storage, delivery, erection and bracing of trusses and truss systems, see ***ANSI/TPI1 Quality Criteria, DSB-89 and BCSI Building Component Safety Information*** available from Truss Plate Institute, 218 N. Lee Street, Suite 312, Alexandria, VA 22314.

MiTek USA, Inc.
400 Sunrise Avenue, Suite 270
Roseville, CA 95661

Job	Truss	Truss Type	Qty	Ply	ESPINOZA R60548707
J19-319	JG6	Jack-Closed	1	1	Job Reference (optional)

Stockton Truss, STOCKTON, CA 95215 8.330 s Dec 5 2019 MiTek Industries, Inc. Tue Dec 10 11:44:50 2019 Page 1
ID:eURouH3h5RzkGDllLuCRE8yWpf_-CisMb5SnsAI3RVSixNG6j9jWosvtOtk3VV8t4?yANZh

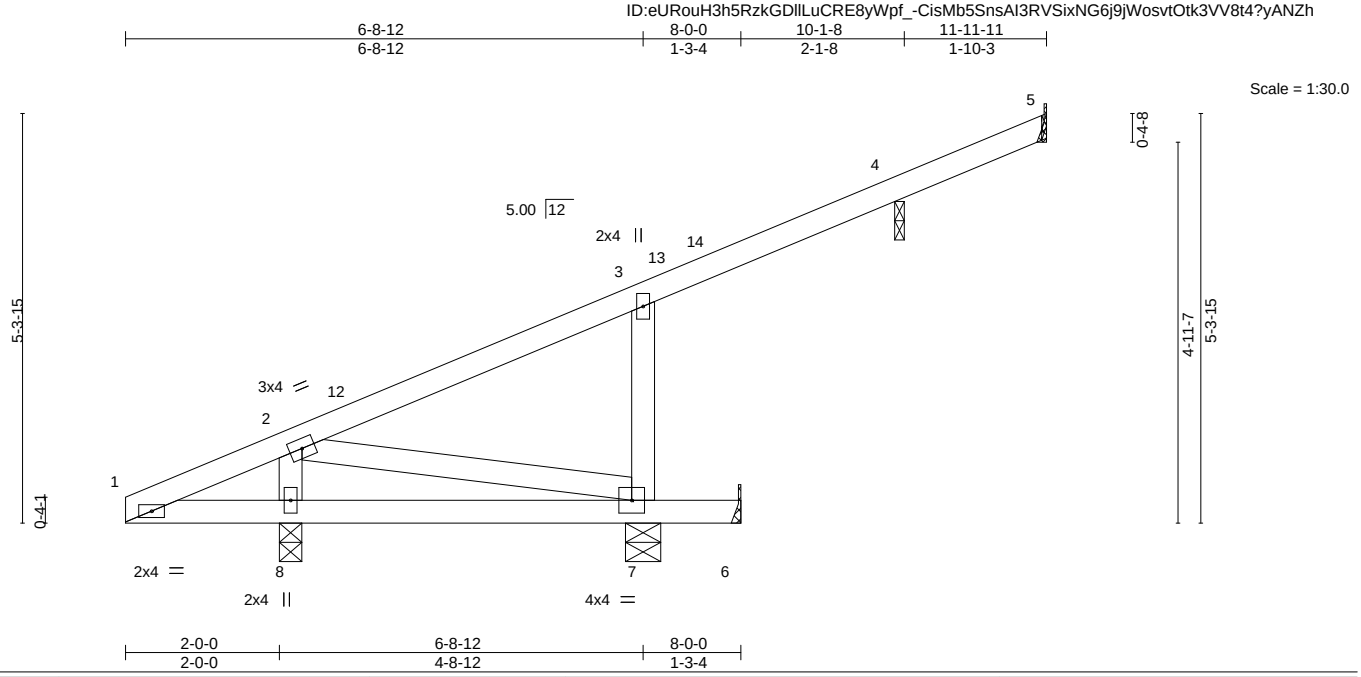

LOADING (psf)		SPACING-	2-0-0	CSI.		DEFL.	in	(loc)	l/defl	L/d	PLATES	GRIP
TCLL	30.0	Plate Grip DOL	1.15	TC	0.22	Vert(LL)	-0.01	7-8	>999	240	MT20	220/195
(Roof Snow=30.0)		Lumber DOL	1.15	BC	0.08	Vert(CT)	-0.02	7-8	>999	180		
TCDL	14.0	Rep Stress Incr	YES	WB	0.08	Horz(CT)	-0.00	5	n/a	n/a		
BCLL	0.0 *	Code	IBC2015/TPI2014	Matrix-MP		Wind(LL)	0.01	7-8	>999	360	Weight: 40 lb	FT = 20%
BCDL	10.0											

LUMBER-
TOP CHORD 2x4 DF No.1&Btr G
BOT CHORD 2x4 DF No.1&Btr G
WEBS 2x4 DF Std G

BRACING-
TOP CHORD Structural wood sheathing directly applied or 6-0-0 oc purlins.
BOT CHORD Rigid ceiling directly applied or 6-0-0 oc bracing.

REACTIONS. All bearings Mechanical except (jt=length) 7=0-5-8, 8=0-3-8, 4=0-1-8.
(lb) - Max Horz 8=129(LC 14)
Max Uplift All uplift 100 lb or less at joint(s) 5, 6, 7, 8, 4
Max Grav All reactions 250 lb or less at joint(s) 5, 6 except 7=503(LC 21), 8=495(LC 1), 4=253(LC 21)

FORCES. (lb) - Max. Comp./Max. Ten. - All forces 250 (lb) or less except when shown.
WEBS 3-7=-442/129, 2-8=-418/85

NOTES-
1) Wind: ASCE 7-10; Vult=110mph (3-second gust) Vasd=87mph; TCDL=7.2psf; BCDL=4.2psf; h=25ft; Cat. II; Exp C; Enclosed; MWFRS (envelope) and C-C Exterior(2) 0-0-0 to 3-0-0, Interior(1) 3-0-0 to 11-10-15 zone; cantilever left and right exposed ; porch left and right exposed;C-C for members and forces & MWFRS for reactions shown; Lumber DOL=1.33 plate grip DOL=1.33
2) TCLL: ASCE 7-10; Pf=30.0 psf (flat roof snow); Category II; Exp C; Partially Exp.; Ct=1.00
3) Unbalanced snow loads have been considered for this design.
4) This truss has been designed for a 10.0 psf bottom chord live load nonconcurrent with any other live loads.
5) * This truss has been designed for a live load of 20.0psf on the bottom chord in all areas where a rectangle 3-6-0 tall by 2-0-0 wide will fit between the bottom chord and any other members.
6) A plate rating reduction of 20% has been applied for the green lumber members.
7) Refer to girder(s) for truss to truss connections.
8) Provide mechanical connection (by others) of truss to bearing plate at joint(s) 4.
9) Provide mechanical connection (by others) of truss to bearing plate capable of withstanding 100 lb uplift at joint(s) 5, 6, 7, 8, 4.
10) Beveled plate or shim required to provide full bearing surface with truss chord at joint(s) 4.
11) This truss is designed for a creep factor of 3.01, which is used to calculate the Vert(CT) deflection per ANSI/TPI 1.

December 11,2019

WARNING - Verify design parameters and READ NOTES ON THIS AND INCLUDED MITEK REFERENCE PAGE MII-7473 rev. 10/03/2015 BEFORE USE.
Design valid for use only with MiTek® connectors. This design is based only upon parameters shown, and is for an individual building component, not a truss system. Before use, the building designer must verify the applicability of design parameters and properly incorporate this design into the overall building design. Bracing indicated is to prevent buckling of individual truss web and/or chord members only. Additional temporary and permanent bracing is always required for stability and to prevent collapse with possible personal injury and property damage. For general guidance regarding the fabrication, storage, delivery, erection and bracing of trusses and truss systems, see ***ANSI/TPI1 Quality Criteria, DSB-89 and BCSI Building Component Safety Information*** available from Truss Plate Institute, 218 N. Lee Street, Suite 312, Alexandria, VA 22314.

MiTek USA, Inc.
400 Sunrise Avenue, Suite 270
Roseville, CA 95661

Job	Truss	Truss Type	Qty	Ply	ESPINOZA R60548708
J19-319	JG7	Jack-Closed	1	1	Job Reference (optional)

Stockton Truss, STOCKTON, CA 95215 8.330 s Dec 5 2019 MiTek Industries, Inc. Tue Dec 10 11:44:51 2019 Page 1

ID:eURouH3h5RzkGDllLuCRE8yWpf_-guPkoRTPdUQw3f0vU5nLGMGhlGF77J3Dk9tQcRyANZg

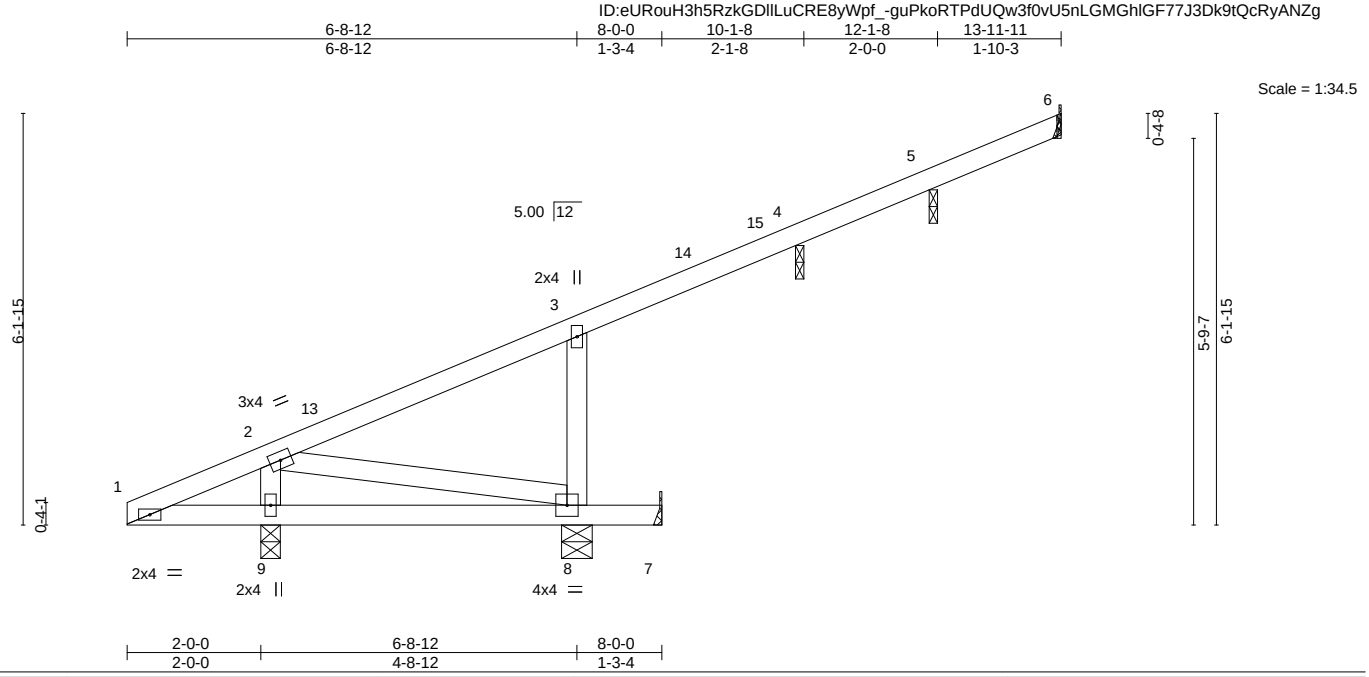

LOADING (psf)		SPACING-	2-0-0	CSI.		DEFL.	in	(loc)	l/defl	L/d	PLATES	GRIP
TCLL	30.0	Plate Grip DOL	1.15	TC	0.20	Vert(LL)	-0.01	8-9	>999	240	MT20	220/195
(Roof Snow=30.0)		Lumber DOL	1.15	BC	0.08	Vert(CT)	-0.02	8-9	>999	180		
TCDL	14.0	Rep Stress Incr	YES	WB	0.07	Horz(CT)	-0.00	6	n/a	n/a		
BCLL	0.0 *	Code	IBC2015/TPI2014	Matrix-MP		Wind(LL)	0.01	8-9	>999	360	Weight: 43 lb	FT = 20%
BCDL	10.0											

LUMBER-

TOP CHORD 2x4 DF No.1&Btr G
BOT CHORD 2x4 DF No.1&Btr G
WEBS 2x4 DF Std G

BRACING-

TOP CHORD Structural wood sheathing directly applied or 6-0-0 oc purlins.
BOT CHORD Rigid ceiling directly applied or 6-0-0 oc bracing.

REACTIONS. All bearings Mechanical except (jt=length) 8=0-5-8, 9=0-3-8, 4=0-1-8, 5=0-1-8.
(lb) - Max Horz 9=151(LC 14)
Max Uplift All uplift 100 lb or less at joint(s) 6, 7, 8, 9, 4, 5
Max Grav All reactions 250 lb or less at joint(s) 6, 7, 5 except 8=472(LC 21), 9=495(LC 1), 4=259(LC 21)

FORCES. (lb) - Max. Comp./Max. Ten. - All forces 250 (lb) or less except when shown.
WEBS 3-8=-410/104, 2-9=-418/70

NOTES-

1) Wind: ASCE 7-10; Vult=110mph (3-second gust) Vasd=87mph; TCDL=7.2psf; BCDL=4.2psf; h=25ft; Cat. II; Exp C; Enclosed; MWFRS (envelope) and C-C Exterior(2) 0-0-0 to 3-0-0, Interior(1) 3-0-0 to 13-10-15 zone; cantilever left and right exposed ; porch left and right exposed;C-C for members and forces & MWFRS for reactions shown; Lumber DOL=1.33 plate grip DOL=1.33
2) TCLL: ASCE 7-10; Pf=30.0 psf (flat roof snow); Category II; Exp C; Partially Exp.; Ct=1.00
3) Unbalanced snow loads have been considered for this design.
4) This truss has been designed for a 10.0 psf bottom chord live load nonconcurrent with any other live loads.
5) * This truss has been designed for a live load of 20.0psf on the bottom chord in all areas where a rectangle 3-6-0 tall by 2-0-0 wide will fit between the bottom chord and any other members.
6) A plate rating reduction of 20% has been applied for the green lumber members.
7) Refer to girder(s) for truss to truss connections.
8) Provide mechanical connection (by others) of truss to bearing plate at joint(s) 4, 5.
9) Provide mechanical connection (by others) of truss to bearing plate capable of withstanding 100 lb uplift at joint(s) 6, 7, 8, 9, 4, 5.
10) Beveled plate or shim required to provide full bearing surface with truss chord at joint(s) 4, 5.
11) This truss is designed for a creep factor of 3.01, which is used to calculate the Vert(CT) deflection per ANSI/TPI 1.

December 11,2019

WARNING - Verify design parameters and READ NOTES ON THIS AND INCLUDED MITEK REFERENCE PAGE MII-7473 rev. 10/03/2015 BEFORE USE.
Design valid for use only with MiTek® connectors. This design is based only upon parameters shown, and is for an individual building component, not a truss system. Before use, the building designer must verify the applicability of design parameters and properly incorporate this design into the overall building design. Bracing indicated is to prevent buckling of individual truss web and/or chord members only. Additional temporary and permanent bracing is always required for stability and to prevent collapse with possible personal injury and property damage. For general guidance regarding the fabrication, storage, delivery, erection and bracing of trusses and truss systems, see ***ANSI/TPI1 Quality Criteria, DSB-89 and BCSI Building Component Safety Information*** available from Truss Plate Institute, 218 N. Lee Street, Suite 312, Alexandria, VA 22314.

MiTek USA, Inc.
400 Sunrise Avenue, Suite 270
Roseville, CA 95661

Job	Truss	Truss Type	Qty	Ply	ESPINOZA R60548709
J19-319	JG8	Jack-Closed	2	1	Job Reference (optional)

Stockton Truss, STOCKTON, CA 95215 8.330 s Dec 5 2019 MiTek Industries, Inc. Tue Dec 10 11:44:52 2019 Page 1
ID:eURouH3h5RzkGDllLuCRE8yWpf_-84z6?nT2OoYnhpb52oIapaorKgZ5smzMypd_8uyANZf

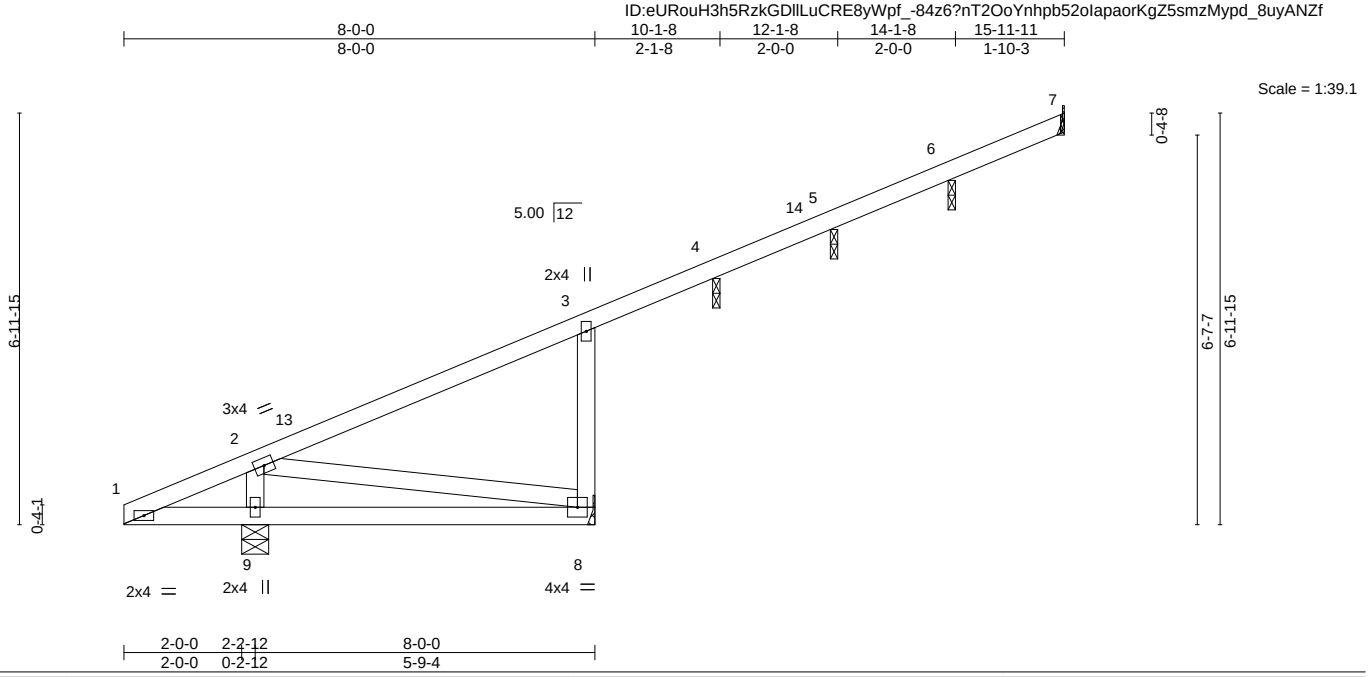

LOADING (psf)		SPACING-	2-0-0	CSI.		DEFL.	in	(loc)	l/defl	L/d	PLATES	GRIP
TCLL	30.0	Plate Grip DOL	1.15	TC	0.28	Vert(LL)	-0.02	8-9	>999	240	MT20	220/195
(Roof Snow=30.0)		Lumber DOL	1.15	BC	0.16	Vert(CT)	-0.08	8-9	>885	180		
TCDL	14.0	Rep Stress Incr	YES	WB	0.09	Horz(CT)	-0.00	7	n/a	n/a		
BCLL	0.0 *	Code IBC2015/TPI2014		Matrix-MP		Wind(LL)	0.05	8-9	>999	360	Weight: 48 lb	FT = 20%
BCDL	10.0											

LUMBER-
TOP CHORD 2x4 DF No.1&Btr G
BOT CHORD 2x4 DF No.1&Btr G
WEBS 2x4 DF Std G

BRACING-
TOP CHORD Structural wood sheathing directly applied or 6-0-0 oc purlins, except end verticals.
BOT CHORD Rigid ceiling directly applied or 6-0-0 oc bracing.

REACTIONS. All bearings 0-1-8 except (jt=length) 7=Mechanical, 8=Mechanical, 9=0-5-8.
(lb) - Max Horz 9=172(LC 14)
Max Uplift All uplift 100 lb or less at joint(s) 7, 8, 9, 4, 5, 6
Max Grav All reactions 250 lb or less at joint(s) 7, 4, 5, 6 except 8=473(LC 1), 9=558(LC 1)

FORCES. (lb) - Max. Comp./Max. Ten. - All forces 250 (lb) or less except when shown.
TOP CHORD 3-8=-428/114
WEBS 2-9=-461/24

NOTES-
1) Wind: ASCE 7-10; Vult=110mph (3-second gust) Vasd=87mph; TCDL=7.2psf; BCDL=4.2psf; h=25ft; Cat. II; Exp C; Enclosed; MWFRS (envelope) and C-C Exterior(2) 0-0-0 to 3-0-0, Interior(1) 3-0-0 to 15-10-15 zone; cantilever left and right exposed ; porch left and right exposed;C-C for members and forces & MWFRS for reactions shown; Lumber DOL=1.33 plate grip DOL=1.33
2) TCLL: ASCE 7-10; Pf=30.0 psf (flat roof snow); Category II; Exp C; Partially Exp.; Ct=1.00
3) Unbalanced snow loads have been considered for this design.
4) This truss has been designed for a 10.0 psf bottom chord live load nonconcurrent with any other live loads.
5) * This truss has been designed for a live load of 20.0psf on the bottom chord in all areas where a rectangle 3-6-0 tall by 2-0-0 wide will fit between the bottom chord and any other members.
6) A plate rating reduction of 20% has been applied for the green lumber members.
7) Refer to girder(s) for truss to truss connections.
8) Provide mechanical connection (by others) of truss to bearing plate at joint(s) 4, 5, 6.
9) Provide mechanical connection (by others) of truss to bearing plate capable of withstanding 100 lb uplift at joint(s) 7, 8, 9, 4, 5, 6.
10) Beveled plate or shim required to provide full bearing surface with truss chord at joint(s) 4, 5, 6.
11) This truss is designed for a creep factor of 3.01, which is used to calculate the Vert(CT) deflection per ANSI/TPI 1.

December 11,2019

WARNING - Verify design parameters and READ NOTES ON THIS AND INCLUDED MITEK REFERENCE PAGE MII-7473 rev. 10/03/2015 BEFORE USE.
Design valid for use only with MiTek® connectors. This design is based only upon parameters shown, and is for an individual building component, not a truss system. Before use, the building designer must verify the applicability of design parameters and properly incorporate this design into the overall building design. Bracing indicated is to prevent buckling of individual truss web and/or chord members only. Additional temporary and permanent bracing is always required for stability and to prevent collapse with possible personal injury and property damage. For general guidance regarding the fabrication, storage, delivery, erection and bracing of trusses and truss systems, see ***ANSI/TPI1 Quality Criteria, DSB-89 and BCSI Building Component Safety Information*** available from Truss Plate Institute, 218 N. Lee Street, Suite 312, Alexandria, VA 22314.

MiTek USA, Inc.
400 Sunrise Avenue, Suite 270
Roseville, CA 95661

Job	Truss	Truss Type	Qty	Ply	ESPINOZA R60548710
J19-319	JG9	Jack-Closed	1	1	Job Reference (optional)

Stockton Truss, STOCKTON, CA 95215 8.330 s Dec 5 2019 MiTek Industries, Inc. Tue Dec 10 11:44:53 2019 Page 1
ID:eURouH3h5RzkGDllLuCRE8yWpf_-cHXVD7Ug95geIzAHcWppLnL044vKbD6WBTMXhKyANZe

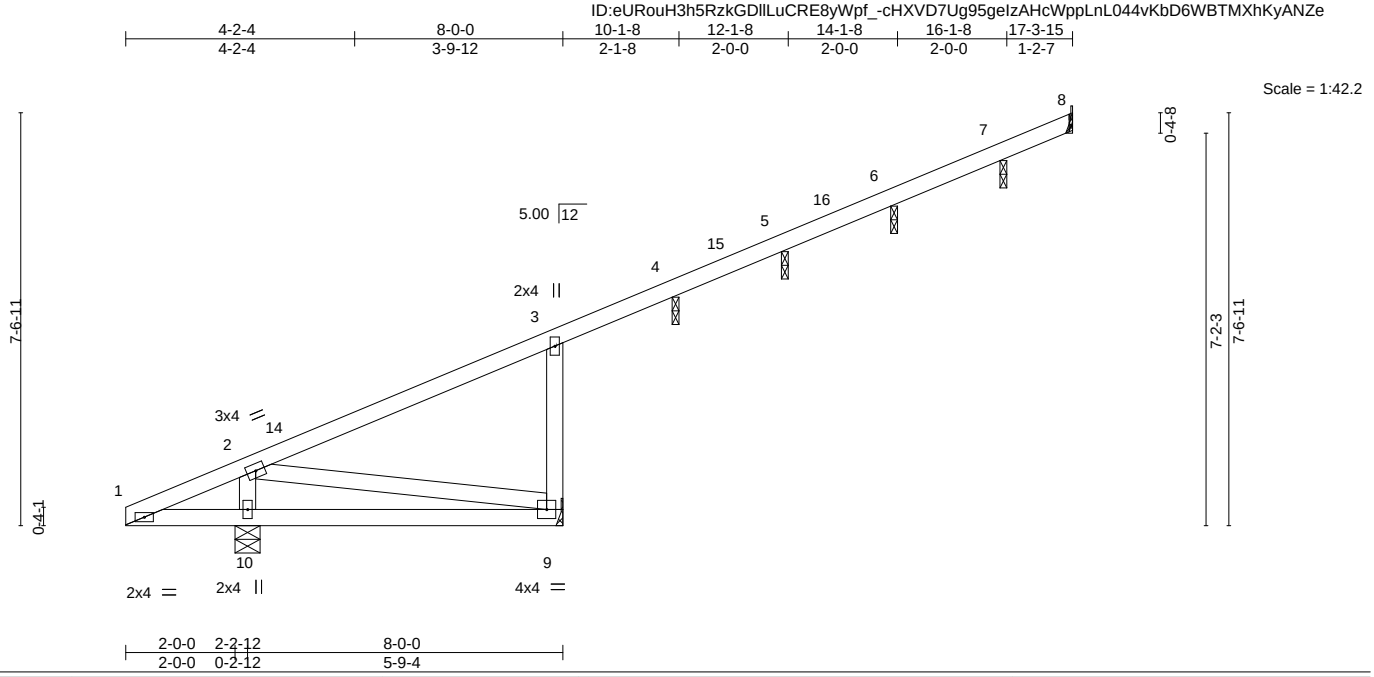

LOADING (psf)		SPACING-	2-0-0	CSI.		DEFL.	in	(loc)	l/defl	L/d	PLATES	GRIP
TCLL	30.0	Plate Grip DOL	1.15	TC	0.28	Vert(LL)	-0.02	9-10	>999	240	MT20	220/195
(Roof Snow=30.0)		Lumber DOL	1.15	BC	0.16	Vert(CT)	-0.08	9-10	>885	180		
TCDL	14.0	Rep Stress Incr	YES	WB	0.10	Horz(CT)	-0.01	8	n/a	n/a		
BCLL	0.0 *	Code	IBC2015/TPI2014	Matrix-MP		Wind(LL)	0.05	9-10	>999	360	Weight: 50 lb	FT = 20%
BCDL	10.0											

LUMBER-
TOP CHORD 2x4 DF No.1&Btr G
BOT CHORD 2x4 DF No.1&Btr G
WEBS 2x4 DF Std G

BRACING-
TOP CHORD Structural wood sheathing directly applied or 6-0-0 oc purlins, except end verticals.
BOT CHORD Rigid ceiling directly applied or 6-0-0 oc bracing.

REACTIONS. All bearings 0-1-8 except (jt=length) 8=Mechanical, 9=Mechanical, 10=0-5-8.
(lb) - Max Horz 10=187(LC 14)
Max Uplift All uplift 100 lb or less at joint(s) 8, 9, 10, 4, 5, 6, 7
Max Grav All reactions 250 lb or less at joint(s) 8, 4, 5, 7 except 9=473(LC 1), 10=558(LC 1), 6=252(LC 21)

FORCES. (lb) - Max. Comp./Max. Ten. - All forces 250 (lb) or less except when shown.
TOP CHORD 3-9=-428/115
BOT CHORD 9-10=-256/118
WEBS 2-9=-119/260, 2-10=-461/14

NOTES-
1) Wind: ASCE 7-10; Vult=110mph (3-second gust) Vasd=87mph; TCDL=7.2psf; BCDL=4.2psf; h=25ft; Cat. II; Exp C; Enclosed; MWFRS (envelope) and C-C Exterior(2) 0-0-0 to 3-0-0, Interior(1) 3-0-0 to 17-3-3 zone; cantilever left and right exposed ; porch left and right exposed;C-C for members and forces & MWFRS for reactions shown; Lumber DOL=1.33 plate grip DOL=1.33
2) TCLL: ASCE 7-10; Pf=30.0 psf (flat roof snow); Category II; Exp C; Partially Exp.; Ct=1.00
3) Unbalanced snow loads have been considered for this design.
4) This truss has been designed for a 10.0 psf bottom chord live load nonconcurrent with any other live loads.
5) * This truss has been designed for a live load of 20.0psf on the bottom chord in all areas where a rectangle 3-6-0 tall by 2-0-0 wide will fit between the bottom chord and any other members.
6) A plate rating reduction of 20% has been applied for the green lumber members.
7) Refer to girder(s) for truss to truss connections.
8) Provide mechanical connection (by others) of truss to bearing plate at joint(s) 4, 5, 6, 7.
9) Provide mechanical connection (by others) of truss to bearing plate capable of withstanding 100 lb uplift at joint(s) 8, 9, 10, 4, 5, 6, 7.
10) Beveled plate or shim required to provide full bearing surface with truss chord at joint(s) 4, 5, 6, 7.
11) This truss is designed for a creep factor of 3.01, which is used to calculate the Vert(CT) deflection per ANSI/TPI 1.

December 11,2019

WARNING - Verify design parameters and READ NOTES ON THIS AND INCLUDED MITEK REFERENCE PAGE MII-7473 rev. 10/03/2015 BEFORE USE.
Design valid for use only with MiTek® connectors. This design is based only upon parameters shown, and is for an individual building component, not a truss system. Before use, the building designer must verify the applicability of design parameters and properly incorporate this design into the overall building design. Bracing indicated is to prevent buckling of individual truss web and/or chord members only. Additional temporary and permanent bracing is always required for stability and to prevent collapse with possible personal injury and property damage. For general guidance regarding the fabrication, storage, delivery, erection and bracing of trusses and truss systems, see ***ANSI/TPI1 Quality Criteria, DSB-89 and BCSI Building Component Safety Information*** available from Truss Plate Institute, 218 N. Lee Street, Suite 312, Alexandria, VA 22314.

MiTek USA, Inc.
400 Sunrise Avenue, Suite 270
Roseville, CA 95661

Job	Truss	Truss Type	Qty	Ply	ESPINOZA R60548711
J19-319	JH8	Jack-Closed	1	1	Job Reference (optional)

Stockton Truss, STOCKTON, CA 95215 8.330 s Dec 5 2019 MiTek Industries, Inc. Tue Dec 10 11:44:54 2019 Page 1
ID:eURouH3h5RzkGDllLuCRE8yWpf_-4T5tQTVIwPoVw6lTADL2u?uBqUFYKgifQ765DmyANZd

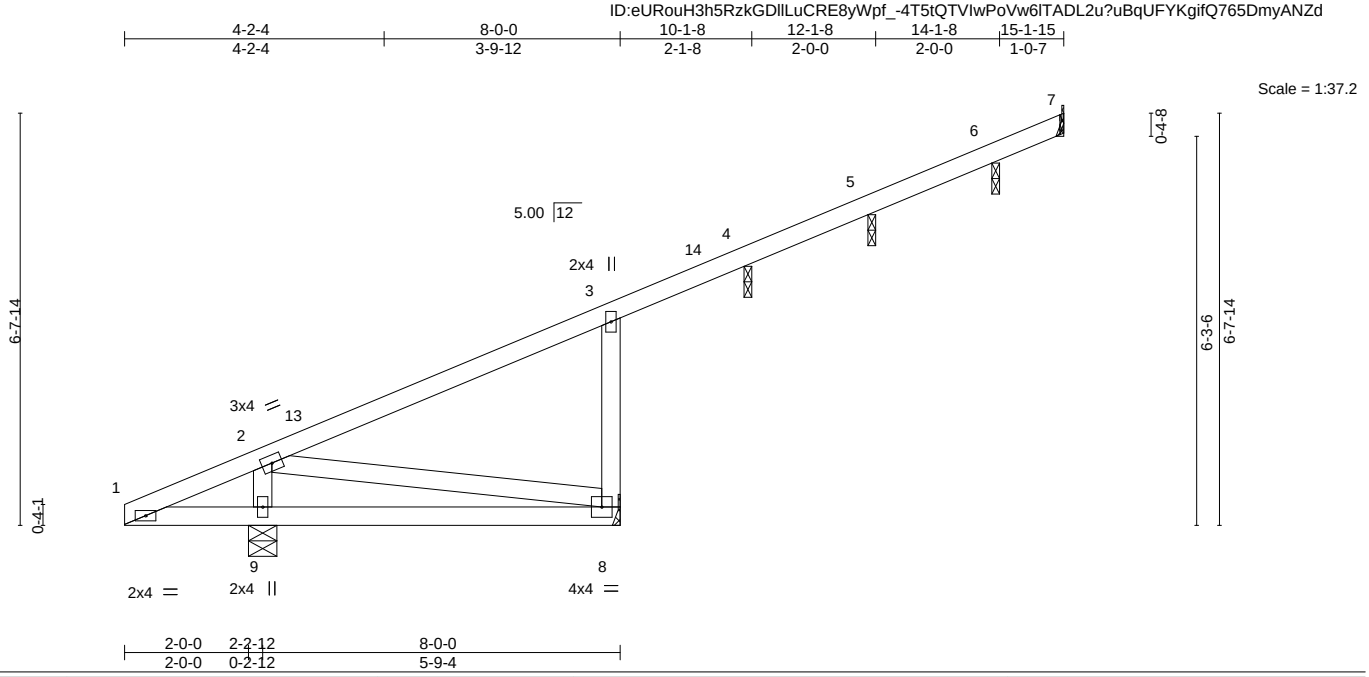

LOADING (psf)		SPACING-	2-0-0	CSI.		DEFL.	in	(loc)	l/defl	L/d	PLATES	GRIP
TCLL	30.0	Plate Grip DOL	1.15	TC	0.28	Vert(LL)	-0.02	8-9	>999	240	MT20	220/195
(Roof Snow=30.0)		Lumber DOL	1.15	BC	0.16	Vert(CT)	-0.08	8-9	>885	180		
TCDL	14.0	Rep Stress Incr	YES	WB	0.08	Horz(CT)	-0.00	7	n/a	n/a		
BCLL	0.0 *	Code	IBC2015/TPI2014	Matrix-MP		Wind(LL)	0.05	8-9	>999	360	Weight: 46 lb	FT = 20%
BCDL	10.0											

LUMBER-
TOP CHORD 2x4 DF No.1&Btr G
BOT CHORD 2x4 DF No.1&Btr G
WEBS 2x4 DF Std G

BRACING-
TOP CHORD Structural wood sheathing directly applied or 6-0-0 oc purlins, except end verticals.
BOT CHORD Rigid ceiling directly applied or 6-0-0 oc bracing.

REACTIONS. All bearings 0-1-8 except (jt=length) 7=Mechanical, 8=Mechanical, 9=0-5-8.
(lb) - Max Horz 9=163(LC 14)
Max Uplift All uplift 100 lb or less at joint(s) 7, 8, 9, 4, 5, 6
Max Grav All reactions 250 lb or less at joint(s) 7, 4, 5, 6 except 8=476(LC 21), 9=558(LC 1)

FORCES. (lb) - Max. Comp./Max. Ten. - All forces 250 (lb) or less except when shown.
TOP CHORD 3-8=-432/114
WEBS 2-9=-461/30

NOTES-
1) Wind: ASCE 7-10; Vult=110mph (3-second gust) Vasd=87mph; TCDL=7.2psf; BCDL=4.2psf; h=25ft; Cat. II; Exp C; Enclosed; MWFRS (envelope) and C-C Exterior(2) 0-0-0 to 3-0-0, Interior(1) 3-0-0 to 15-1-3 zone; cantilever left and right exposed ; porch left and right exposed;C-C for members and forces & MWFRS for reactions shown; Lumber DOL=1.33 plate grip DOL=1.33
2) TCLL: ASCE 7-10; Pf=30.0 psf (flat roof snow); Category II; Exp C; Partially Exp.; Ct=1.00
3) Unbalanced snow loads have been considered for this design.
4) This truss has been designed for a 10.0 psf bottom chord live load nonconcurrent with any other live loads.
5) * This truss has been designed for a live load of 20.0psf on the bottom chord in all areas where a rectangle 3-6-0 tall by 2-0-0 wide will fit between the bottom chord and any other members.
6) A plate rating reduction of 20% has been applied for the green lumber members.
7) Refer to girder(s) for truss to truss connections.
8) Provide mechanical connection (by others) of truss to bearing plate at joint(s) 4, 5, 6.
9) Provide mechanical connection (by others) of truss to bearing plate capable of withstanding 100 lb uplift at joint(s) 7, 8, 9, 4, 5, 6.
10) Beveled plate or shim required to provide full bearing surface with truss chord at joint(s) 4, 5, 6.
11) This truss is designed for a creep factor of 3.01, which is used to calculate the Vert(CT) deflection per ANSI/TPI 1.

December 11,2019

WARNING - Verify design parameters and READ NOTES ON THIS AND INCLUDED MITEK REFERENCE PAGE MII-7473 rev. 10/03/2015 BEFORE USE.
Design valid for use only with MiTek® connectors. This design is based only upon parameters shown, and is for an individual building component, not a truss system. Before use, the building designer must verify the applicability of design parameters and properly incorporate this design into the overall building design. Bracing indicated is to prevent buckling of individual truss web and/or chord members only. Additional temporary and permanent bracing is always required for stability and to prevent collapse with possible personal injury and property damage. For general guidance regarding the fabrication, storage, delivery, erection and bracing of trusses and truss systems, see ***ANSI/TPI1 Quality Criteria, DSB-89 and BCSI Building Component Safety Information*** available from Truss Plate Institute, 218 N. Lee Street, Suite 312, Alexandria, VA 22314.

MiTek USA, Inc.
400 Sunrise Avenue, Suite 270
Roseville, CA 95661

Symbols

PLATE LOCATION AND ORIENTATION

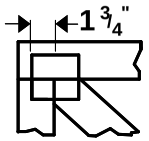

Center plate on joint unless x, y offsets are indicated. Dimensions are in ft-in-sixteenths. Apply plates to both sides of truss and fully embed teeth.

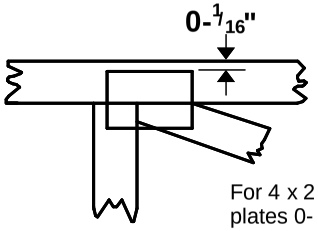

For 4 x 2 orientation, locate plates 0- 1/16" from outside edge of truss.

This symbol indicates the required direction of slots in connector plates.

*** Plate location details available in MiTek 20/20 software or upon request.**

PLATE SIZE

4 x 4

The first dimension is the plate width measured perpendicular to slots. Second dimension is the length parallel to slots.

LATERAL BRACING LOCATION

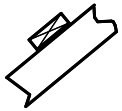

Indicated by symbol shown and/or by text in the bracing section of the output. Use T or I bracing if indicated.

BEARING

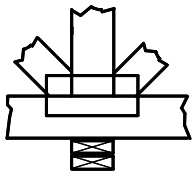

Indicates location where bearings (supports) occur. Icons vary but reaction section indicates joint number where bearings occur. Min size shown is for crushing only.

Industry Standards:

ANSI/TPI1: National Design Specification for Metal Plate Connected Wood Truss Construction.
DSB-89: Design Standard for Bracing.
BCSI: Building Component Safety Information, Guide to Good Practice for Handling, Installing & Bracing of Metal Plate Connected Wood Trusses.

Numbering System

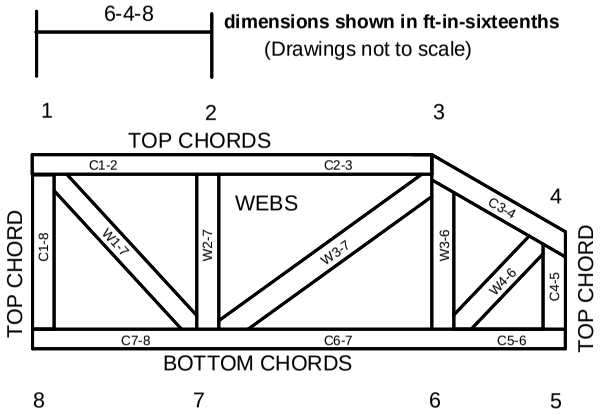

JOINTS ARE GENERALLY NUMBERED/LETTERED CLOCKWISE AROUND THE TRUSS STARTING AT THE JOINT FARTHEST TO THE LEFT.

CHORDS AND WEBS ARE IDENTIFIED BY END JOINT NUMBERS/LETTERS.

PRODUCT CODE APPROVALS

ICC-ES Reports:

ESR-1311, ESR-1352, ESR1988
ER-3907, ESR-2362, ESR-1397, ESR-3282

Trusses are designed for wind loads in the plane of the truss unless otherwise shown.

Lumber design values are in accordance with ANSI/TPI 1 section 6.3 These truss designs rely on lumber values established by others.

© 2012 MiTek® All Rights Reserved

MiTek Engineering Reference Sheet: MII-7473 rev. 10/03/2015

General Safety Notes

Failure to Follow Could Cause Property Damage or Personal Injury

1. Additional stability bracing for truss system, e.g. diagonal or X-bracing, is always required. See BCSI.
2. Truss bracing must be designed by an engineer. For wide truss spacing, individual lateral braces themselves may require bracing, or alternative Tor I bracing should be considered.
3. Never exceed the design loading shown and never stack materials on inadequately braced trusses.
4. Provide copies of this truss design to the building designer, erection supervisor, property owner and all other interested parties.
5. Cut members to bear tightly against each other.
6. Place plates on each face of truss at each joint and embed fully. Knots and wane at joint locations are regulated by ANSI/TPI 1.
7. Design assumes trusses will be suitably protected from the environment in accord with ANSI/TPI 1.
8. Unless otherwise noted, moisture content of lumber shall not exceed 19% at time of fabrication.
9. Unless expressly noted, this design is not applicable for use with fire retardant, preservative treated, or green lumber.
10. Camber is a non-structural consideration and is the responsibility of truss fabricator. General practice is to camber for dead load deflection.
11. Plate type, size, orientation and location dimensions indicated are minimum plating requirements.
12. Lumber used shall be of the species and size, and in all respects, equal to or better than that specified.
13. Top chords must be sheathed or purlins provided at spacing indicated on design.
14. Bottom chords require lateral bracing at 10 ft. spacing, or less, if no ceiling is installed, unless otherwise noted.
15. Connections not shown are the responsibility of others.
16. Do not cut or alter truss member or plate without prior approval of an engineer.
17. Install and load vertically unless indicated otherwise.
18. Use of green or treated lumber may pose unacceptable environmental, health or performance risks. Consult with project engineer before use.
19. Review all portions of this design (front, back, words and pictures) before use. Reviewing pictures alone is not sufficient.
20. Design assumes manufacture in accordance with ANSI/TPI 1 Quality Criteria.